FM/AM 1000A

COMMUNICATIONS SERVICE MONITOR

MANUAL PART NUMBER: 1002-2361-000

DATE PRINTED: JULY 1978

10200 West York Street / Wichita, Kansas 67215 U.S.A. / (316) 522-4981 /TWX 910-741-6952

PUBLISHED BY
IFR, INC.
Wichita, Kansas
67215

Copyright 1978 by IFR, Inc.

All rights reserved. Printed in the United States of America. No part of this publication may be reproduced, stored in a retrieval system, or transmitted in any form or by any means, electronic, mechanical, photocopying, recording or otherwise without the prior written permission of the publisher.

FM/AM-1000A

TABLE OF CONTENTS

MAINTENANCE

Section I — Page No

SPECIFICATIONS

Signal Generator..... 1-1
Receiver..... 1-2
Power Measurements..... 1-3
Tone Frequency Monitoring..... 1-3
Oscilloscope..... 1-3
Physical Characteristics..... 1-3
Functional Description of Front Panel..... 1-4
Controls, Indicators, and Connectors

Section II

TESTING PROCEDURES

Preliminary..... 2-1
Transmitter Tests..... 2-2
Receiver Tests..... 2-4
Signal Generator Calibration..... 2-4

Section III

SELF CHECK OF FREQUENCY ERROR INDICATIONS

Frequency Error Meter Self Check..... 3-1
Self Check Deviation/Power Meter..... 3-1
Self Check Output Level..... 3-2

TABLE OF CONTENTS

MAINTENANCE

(Cont'd)

Section IV — Page No

THEORY OF OPERATION

4.1	Introduction	4.1
4.2	General Description.....	4.1
4.3	General Circuit Theory.....	4.1
4.4	Frequency Control System for the..... First Local Oscillator	4.2
4.5	Frequency Control System for the..... Second Local Oscillator	4.3
4.6	Audio Modulation Generator.....	4.3
4.7	Clock Divider Circuit.....	4.3
4.8	Oscilloscope.....	4.3
4.9	Power Supply.....	4.5
4.10	Operation as a Signal Generator.....	4.6

Section V

PERFORMANCE EVALUATION

5.1	Introduction.....	5.1
5.1.3	Case Disassembly.....	5.1
5.2	Signal Generator Calibration.....	5.1
5.3	Self Check of Frequency Error Meter.....	5.2
5.4	Self Check of Deviation Meter.....	5.2
5.5	Self Check of Output Level.....	5.3
5.6	Check of RF Power Meter.....	5.3
5.7	Check for Holes in Synthesizer Operation...	5.4
5.8	Tone Generator Performance.....	5.5
5.9	Power Supply Evaluation.....	5.5

TABLE OF CONTENTS

MAINTENANCE

(Cont'd)

Section VI		Page No
	CALIBRATION	
6.1	Introduction	6-1
6.2	Oscilloscope Calibration	6-2
6.3	Receiver Narrow Band/Wide Band Gain Adjustment	6-2
6.4	Frequency Error Meter Zeroing Adjustment (Setting automatic zeroing circuit to proper operating range in FM/AM-1000A)	6-3
6.5	Frequency Error Meter Calibration	6-4
6.6	Frequency Deviation Meter Calibration (Oscilloscope calibration must be completed prior to meter calibration)	6-4
6.7	RF Power Meter Calibration	6-6
6.8	Power Supply Calibration	6-6

Section VII		
	PARTS LIST	
7.1	Contents	7-1
7.2	Front Panel Assy	7-2
	7 digit Freq. Select Sw. Assy	7-4
	Attenuator Assy	7-4
	Wire Harness Assy	7-4
7.3	Upper Floor Assy	7-9
	Het Amp ÷ 2 Prescaler Assy	7-9
	Clock Divider Assy	7-10
	10 MHz Oven Oscillator Assy	7-10
	10 MHz Oven Oscillator P.C. Bd. Assy	7-11
	Tune Summation Block Assy	7-12
	Dual Buffer Amp. Assy	7-12
	V.C.O	7-13
	1200-2200 MHz Oscillator Assy	7-13
	AGC P.C. Bd. Assy	7-14
7.4	Rear Panel Assy	7-16
	Duty Cycle Regulator & Battery Charge Assy	7-16
7.5	Lower Floor Assy	7-20
	120 MHz Receiver Assy	7-20
	100 MHz Amp. 108 Mixer Assy	7-21
	FM/AM Generator Assy	7-22

TABLE OF CONTENTS

MAINTENANCE

(Cont'd)

Section VII		Page No
7.6	Mother Board Assy.....	7-24
	250 kHz Audio Board Assy.....	7-26
	79-80 MHz Phase Lock Loop Assy.....	7-27
	High Freq. Ø Lock Loop P.C. Board Assy..	7-29
	V.C.O. Tuner P.C. Bd. Assy.....	7-30
	Reg. & P.S. P.C. Bd. Assy.....	7-31
	1200 MHz Amp Assy.....	7-33
	1080 MHz Mult./Amp Assy.....	7-33
	Static Discharge Protector Assy.....	7-34
7.7	Hex Block Rail.....	7-35
	Power Monitor Assy.....	7-35
	1200 MHz Filter D ode, Assy, Sw. Assy...	7-35
	108 MHz Bandpass Filter Assy.....	7-36
	High Frequency Mult. Mixer Block Assy...	7-36
7.8	Assemblies on Upper Right Rail.....	7-37
	100 MHz Filter Assy.....	7-37
	1st Mixer Assy.....	7-37
	2nd Mixer Assy.....	7-37
7.9	Oscilloscope Assy. (thru S/N 1069).....	7-39
	Scope Inverter Bd. Assy.....	7-39
	Scope Main Bd. Assy.....	7-40
7.9-1	Oscilloscope Assy. (S/N 1070 on).....	7-43
	Scope Inverter P.C. Bd. Assy.....	7-43
	Scope Main Board Assy.....	7-44
7.10	Coaxial Cables.....	7-46
7.11	Case Assy.....	7-48

LIST OF ILLUSTRATIONS AND SCHEMATICS

Figure No.		
1-1	FM/AM-1000A Front Panel Controls, Indicators and Connectors	3-23-0524
6-1-1	Composite Assembly (sheet 1 of 3)	4-23-0582
6-1-2	Composite Assembly (sheet 2 of 3)	
6-1-3	Composite Assembly (sheet 3 of 3)	
6-2	Upper Floor Assembly	3-23-0216
6-3	FM/AM-1000A Interconnect Drawing	4-23-0474
6-4	Rear Panel Schematic	3-23-0403
6-5	Rear Panel Wiring Assembly	3-23-0380-2
6-6	Rear Panel Assembly (Outside View)	3-23-0380-3
6-7	Card Edge Connector Pin Layout	
6-8	Power Supply Modification	2-23-0664
6-9	Regulator and Power Supply Schematic	3-23-0042
6-10	Regulator and Power Supply Board Parts Layout	4-23-0091
6-11	Duty Cycle Regulator and Battery Charger Schematic	3-23-0051-1
6-12	Duty Cycle Regulator and Battery Charger Parts Layout	3-23-0051-2
6-13	Duty Cycle Regulator and Battery Charger Wiring	2-23-0459-1
6-14	Duty Cycle Regulator and Battery Charger Wiring	2-23-0459-4
6-15	Duty Cycle Regulator Assembly	4-23-0384
6-16	Receiving Mode and Generating Mode Block Diagram	3-23-0522
6-17	Static Discharge Protector Schematic	1-23-0457

Figure No.		
6-18	Static Discharge Protector Assembly	2-23-0602
6-19	Power Monitor Schematic	1-23-0111
6-20	Power Monitor Assembly	2-23-0228
6-21	Diode Protect and First Mixer Schematic	1-23-0276
6-22	First Mixer Assembly	2-23-0250
6-23	1200 MHz Filter and REC-GEN Switch Schematic	1-23-0124
6-24	1200 MHz Filter Diode Switch Assembly	3-23-0297
6-25	1200 MHz Amplifier Schematic	2-23-0548
6-26	1200 MHz PC Board Parts Layout	2-23-0549
6-27	1200 MHz Amplifier Assembly	3-23-0554
6-28	Second Mixer-Diode Switch Schematic	2-23-0475
6-29	Second Mixer-Diode Switch Assembly	4-23-0462
6-30	First and Second Local Oscillator Sources Block Diagram	3-23-0520
6-31	1080 MHz Multiplier Amplifier Schematic	2-23-0546
6-32	1080 MHz Multiplier Amplifier PC Board Parts Layout	2-23-0513
6-33	1080 MHz Multiplier Assembly	3-23-0516
6-34	108 MHz Filter Schematic	1-23-0421
6-35	108 MHz Bandpass Filter Assembly	2-23-0402
6-36	79-80 MHz Loop Schematic	3-23-0425
6-37	79-80 MHz Loop PC Board Parts Layout	4-23-0424
6-38	High Frequency Phase Lock Loop Block Diagram	3-23-0327
6-39	10 MHz Oven Oscillator Schematic	3-23-0007
6-40	10 MHz Oven Control PC Board Assembly	3-23-0272
6-41	10 MHz Oven Oscillator PC Board Assembly	3-23-0221
6-42	100 MHz Multiplier and 108 MHz Mixer Schematic	3-23-0061

Figure No.		
6-43	100 MHz Multiplier and 108 MHz Mixer PC Board Assembly	3-23-0095
6-44	100 MHz Multiplier and 108 MHz Mixer Assembly	3-23-0219
6-45	100 MHz Filter Schematic	2-23-0300
6-46	100 MHz Filter PC Board Parts Layout	2-23-0303
6-47	100 MHz Filter Assembly	3-23-0591
6-48	High Frequency Multiplier/Mixer Schematic	3-23-0082
6-49	High Frequency Multiplier/Mixer Block Assembly	3-23-0097
6-50	High Frequency Multiplier/Mixer PC Board Assembly	3-23-0101
6-51	Hetrodyne Amp and ÷ 2 Prescaler Schematic (Eff:1000A thru S/N 1169)	3-23-0065
6-52	Hetrodyne Amp and ÷ 2 Prescaler PC Board Parts Layout (Eff: 1000A thru S/N 1169)	3-23-0092
6-53	Hetrodyne Amp and ÷ 2 Prescaler Schematic (Eff: 1000A S/N 1170 and on)	3-23-0685
6-54	Hetrodyne Amp and ÷ 2 Prescaler PC Board Parts Layout (Eff: 1000A S/N 1170 and on)	3-23-0684
6-55	High Frequency Phase Lock Schematic	3-23-0396
6-56	High Frequency Phase Lock PC Board Parts Layout	3-23-0493
6-57	V.C.O. Tuner Schematic	3-23-0038
6-58	V.C.O. Tuner PC Board Parts Layout	3-23-0423
6-59	120 MHz FM/AM Generator Block Diagram	2-23-0416
6-60	FM/AM Generator Schematic	3-23-0262
6-61	FM/AM Generator PC Board Parts Layout	3-23-0496
6-62	Clock Divider Schematic	3-23-0062
6-63	Clock Divider PC Board Parts Layout	3-23-0093
6-64	Clock Divider Assembly	3-23-0217
6-65	Tone Generator Schematic	3-23-0021

Figure No.		
6-66	Modulation Frequency Mother Board Parts Layout	1-23-0046
6-67	Tone Generator Board #1 Parts Layout	3-23-0190
6-68	Tone Generator Board #2 Parts Layout	3-23-0191
6-69	Tone Generator Board #3 Parts Layout	3-23-0192
6-70	Tone Generator Assembly	3-23-0188
6-71	120 MHz Receiver Block Diagram	2-23-0521
6-72	120 MHz Receiver (250 kHz Output) Schematic	3-23-0481
6-73	120 MHz Receiver PC Board Parts Layout	3-23-0482
6-74	120 MHz Receiver Assembly	3-23-0483
6-75	250 kHz IF Monitor - Audio Board Schematic	4-23-0465
6-76	250 kHz IF Monitor - Audio Board Parts Layout	3-23-0573
6-77	1200-2200 MHz Oscillator, Buffer, Tune Summation Schematic	3-23-0558
6-78	1200-2200 MHz Oscillator PC Board Parts Layout	3-23-0559
6-79	AGC System Schematic (Eff: 1000A S/N 882 and on, 1000S S/N 170 and on)	2-23-0690
6-80	AGC System PC Board Parts Layout (Eff: 1000A S/N 882 and on, 1000S S/N 170 and on)	3-23-0686
6-81	Oscilloscope Interconnect	4-23-0703
6-82	FM/AM-1000A Oscilloscope Schematic (Eff: 1000A thru S/N 1069)	3-23-0034
6-83	FM/AM-1000A Oscilloscope Schematic (Eff: 1000A 1070 and on)	4-23-0612
6-84	Oscilloscope Main PC Board Parts Layout (Eff: 1000A thru S/N 1069)	4-23-0076
6-85	Oscilloscope Main PC Board Parts Layout (Eff: 1000A S/N 1070 and on)	3-23-0625
6-86	Oscilloscope Inverter PC Board Schematic (Eff: 1000A S/N 1070 and on)	3-23-0665

Figure No.		
6-87	Oscilloscope Inverter PC Board Parts Layout (Eff: 1000A thru S/N 1069)	3-23-0130
6-88	Oscilloscope Inverter PC Board Parts Layout (Eff: 1000A S/N 1070 and on)	3-23-0624
6-89	Oscilloscope Assembly	4-23-0700

LIMITED WARRANTY AND SERVICE INSTRUCTIONS

A. Warranty.

B. IFR, Inc., warrants that each new instrument manufactured by it is free from defects in material or workmanship under normal use and service for a period of two years from the shipping date. (NOTE: 90 day warranty on battery pack). Each instrument is functionally tested immediately prior to shipment. If, upon examination by IFR, the instrument is determined to be defective in workmanship or material, IFR will, subject to the conditions set forth below, either repair the defective part or replace it with a new part on a pro rata basis. IFR shall not be liable for any delay or failure to furnish a replacement part resulting directly or indirectly from any governmental restriction, priority or allocation or any other governmental regulatory order or action, nor shall IFR be liable for damages by reason of the failure of the instrument to perform properly or for any consequential damages. The warranty does not apply to any instrument that has been subject to negligence, accident, shipping damage, misuse or improper installation or operation, or that in any way has been tampered with, altered or repaired by any person other than an authorized IFR service organization or any employee thereof, or to any instrument whose serial number has been altered, defaced or removed, or to any instrument purchased within, and thereafter removed beyond, the continental limits of the United States. Annual recalibation is not included in warranty.

C. All sales are FOB IFR Factory Wichita. IFR will assume responsibility for freight charges on all legitimate warranty claims within thirty (30) days from the original shipping date. All legitimate warranty claims within thirty (30) to ninety (90) days should be shipped to IFR freight collect and will be returned freight collect. All freight on warranty claims after ninety (90) days will be paid by the customer.

D. This warranty shall, at IFR's option, become void if the equipment ownership is changed, unless the prior owner or the proposed owner obtains approval of continuation of the warranty prior to the change of ownership.

E. This warranty is in lieu of all other warranties, expressed or implied, and no one is authorized to assume any liability on behalf of IFR or impose any obligation upon it in connection with the sale of any instrument, other than as stated above.

F. Changes in Specifications.

G. The right is reserved to change the published specifications of the equipment at any time and to furnish merchandise in

accordance with current specifications without incurring any liability to modify equipment previously sold, or to supply new equipment in accordance with earlier specifications except the classification of special apparatus.

H. Service.

I. When requesting service, the originator shall give IFR information concerning the nature of the failure and the manner in which the equipment was used when the failure occurred. Type, model, and serial number should also be provided.

J. Do not return any products to the factory without first receiving authorization from the factory Customer Service Department.

CONTACT:

IFR, Inc.
10200 W. York St.
Wichita, Kansas 67215 USA

ATTN: Customer Service Department

PHONE: (800) 835-2350 (Customer Service Only)

TWX: 910-741-6952

K. Unless otherwise specifically requested, packaging for a return shipment shall be in the original container and packaging material. If the original container and material are not available, information as to suitable packaging techniques will be provided by the IFR Shipping Department.

L. Returned material claimed defective, but found to meet all previously applicable specifications, will be subject to a minimum evaluation charge consisting of the labor charges involved in the status determination of the material.

M. Returned material not accompanied by statement of claimed defects may be returned at the originator's expense.

N. Any departure from the above instructions without specific factory authorization can be considered a breach of warranty, and all expenses incurred as a result will be billed to the originator.

Operating Precautions

CAUTION

The ANT Connector is used for "over the air" testing only. Do not connect a transmitter to this input.

Maximum ON time for measurement of transmitter output using the TRANS/RCVR connector is:

10 sec at 100W, 15% duty cycle.
20 sec at 50W, 30% duty cycle.
2 min at 30W, 50% duty cycle.

Do not connect transmitter to the 10 MHz REF OUTPUT Jack. Damage to the 10 MHz Ref. Oscillator will result.

If the test set is connected to a vehicle's d.c. supply, unplug the test set while starting the engine. If this is not done a blown fuse or other problems may result.

Do not exceed 200V into the SCOPE Input connector. Voltages over 200V will damage the scope circuitry.

Remove any possible static charge from an unterminated antenna before connecting to unit. To do this short the center conductor to the shield briefly.

Do not attempt to force the attenuator dial past the stops. Internal damage to the attenuator will result.

SPECIFICATIONS
(Eff. S/N 882 on)

SIGNAL GENERATOR

Frequency Range: Frequency synthesized type - 100 Hz to 999.9999 MHz in 100 Hz phase-locked increments. Oven stabilized master oscillator provides an accuracy of 0.00005% of selected output frequency after 20 minutes warm-up from oven off condition. Oven operates continuously with AC line connected, optionally on battery power with the set turned off. Aging stability is 2 to 3 PPM per year during the first year and 1 PPM per year thereafter.

Internal Modulation: Frequency synthesized tone generator; 5 Hz to 9999.9 Hz in 0.1 Hz increments. Accuracy is controlled by the master oscillator. Front panel connector provides convenient modulation tones output. AM variable 0 to 90% from 10 Hz to 5 kHz and 0 to 70% from 5 kHz to 9999.9 Hz. FM variable from 0 to ±15 kHz, deviation, at 1 kHz. Low frequency FM response facilitates swept receiver IF alignments when used in conjunction with internal oscilloscope.

External Modulation: Front Panel connector allows external modulation input to the generators. 6.0 V (±2V) P-P produces ±15 kHz deviation through the modulating frequency range 2 Hz to 30 kHz. 3.0 V (±1 V) P-P produces 100% AM.

Simultaneous Modulation: Generator may be modulated simultaneously from internal and external sources. Internal tone generator may be externally keyed for sequential tone coding.

FM Quieting: 42 dB below 3.3 kHz deviation at 1 kHz. 0.3 to 3 kHz Post Detection BW.

RF Output Power: Continuously variable from -133 dBm to -33 dBm (0.05 µV to 5000 µV) typical.

RF Output Power Accuracy: From -110 to -35 dBm
±2.5 dB up to 400 MHz
±3.0 dB 400 MHz to 999.9999 MHz.

GENERAL SPECIFICATIONS

RECEIVER

Frequency Range:	300 kHz to 999.9999 MHz.
12 dB Sinad Sensitivity: (Typical)	AM, -98 dBm Mod 30% at 1 kHz. FM, -103 dBm Dev 3.3 kHz at 1 kHz.
Frequency Error Meter Sensitivity:	Typically better than 2 µV, above 1 MHz. Sensitivity is reduced below 1 MHz.
Internal Leakage:	Typically less than 2 µV with last four digits set to zero, for example at 111.0000 MHz.
Quieting:	Deviation measurements can be made down to 0.1 kHz.
Bandwidth:	Narrow: RCVR ±9 kHz, Detector Audio bandwidth is 8 kHz. Mid: RCVR ±100 kHz, Detector Audio Bandwidth is 80 kHz. Wide: RCVR ±100 kHz, Detector Audio bandwidth is 80 kHz.
Monitoring:	Frequency error and FM deviation simultaneously displayed on the oscilloscope and meters. Receiver IF envelope is d displayed on the oscilloscope to derive AM information.
Auto Zeroing:	Frequency error meter is automatically zeroed every 1.5 seconds during a 3 ms time period. AUTO Zeroing may be deleted with AUTO-ZERO/BATT switch.
Beat Frequency Oscillator:	Variable injection level for calibrated signal strength measurements, typically less than ±3 dB, from 2 µV to 5,000 µV; frequency variable ±1.5 kHz. Also enables single-sideband and CW monitoring.
Antenna Input Protection:	Built in static discharge protector for antenna jack.
Certification:	The receiver model number FM/AM-1000A is accepted under the requirements of Part 15, Subpart C of the FCC Rules and Regulations.

POWER MEASUREMENTS	0 to 10 and 0 to 100 Watts read directly on a front panel meter to an accuracy of ±10% full scale from 1 to 225 MHz, correction chart supplied for frequencies above 225 MHz. See operation instructions for duty cycle and on-time limitations.
TONE FREQUENCY MONITORING	Precision internal tone generator is selectable with the oscilloscope timebase switch to produce a Lissajou oscilloscope pattern from a received tone, enabling accurate "off-the-air" tone frequency measurements.
OSCILLOSCOPE	AC or DC inputs. DC to 1 MHz bandwidth.

PHYSICAL CHARACTERISTICS

Power:	Conveniently portable with self contained battery that automatically recharges when AC line is connected. Battery operation is approximately 1 hour with the oscilloscope off and 40 minutes with the oscilloscope on before recharge is required. Operates on 110/230 V AC 50 to 400 Hz, 80 Watts, and 11 to 28 V DC. Typical DC currents 4.3 A at 12 V and 1.85 A at 28 V.
Size:	8" (20.3 cm) high, 13.5" (34.3 cm) wide, 18.5" (47.0 cm) deep. Weight 43 lbs (18.2 kg). Rugged all metel construction, designed for field and bench use.
Fan:	Thermostatically controlled fan, switches on when internal ambient temperature reaches 95° F. (35° C).

Functional Description of Front Panel Controls, Indicators, and Connectors

Refer to Figure 1-1

1. Power Switch. When depressed on the left side (PWR), the Test Set is powered by external dc or ac power and the ON lamp lights. When returned to the center position (OFF), power is removed from all systems except the master oscillator oven and battery charger (see paragraph 4). When momentarily depressed on the right side (BATT), the Test Set is powered by the internal rechargable batteries and the ON lamp lights. Press again to turn off.

   In the BATT mode, the Test Set will automatically turn off after approximately eight minutes as battery-saving feature. Depress the switch to the right momentarily to recycle the timer. The batteries are charged whenever the line cord is plugged in whether or not the Test Set is on.

2. TRANS/RCVR Connector. A 50 ohm input/output connection for the transceiver under test. Maximum transmitter input is 30W at 50% duty cycle and 100W at 15% duty cycle or 15W cw (uninterrupted) CAUTION! Maximum ON time is 10 seconds at 100W, 20 seconds at 50W, and 2 minutes at 30W.

3. AUTO ZERO/BATT switch. This is a dual purpose switch. In the AUTO position, the Auto zeroing circuit is operational and not operational in the OFF (center) position. The switch should be in the OFF position if the Auto-Zeroing reference pulse is objectionable in the audio system or visual displays. When the FM/AM-1000A is used as a demodulator to feed decoding equipment, the AUTO-ZERO/BATT switch must be OFF (center position) or data will be lost during the 3ms reference pulse time period. Frequency error measurements should not be relied upon for more than a few seconds after AUTO ZERO/BATT switch is positioned to OFF. Before making frequency measurements, return switch to AUTO position for correct meter reference. The switch may be held in the spring-loaded BATT position for a voltage check. The battery charge is adequate when the right-hand meter indicates in the green band.

4. BATT OVEN Switch. When ON, powers the master oscillator oven from the batteries so the oven temperature can be stabilized when the Test Set is in transit.

5. OVEN Lamp Indicates whether the master oscillator oven is approaching temperature (lamp bright), or stabilized at final temperature (lamp dim), or oven power off (lamp off).

6. RF LEVEL/BFO INJECTION - μV Control. When Test Set is in signal generator (GEN) mode (see paragraph 10), controls the RF level into a 50 ohm load in either μV into 50 ohm, or dBm. When in receiver mode (RCVR), controls beat frequency oscillator (BFO) injection level into receiver for making signal strength measurements of a remote transmitter (see paragraphs 20 and 36).

7. ANT Connector. Connection for external antenna for "over-the-air" testing. DO NOT connect a transmitter to this input.

   NOTE! No antenna may be required if a transmitter is radiating at a small distance from the Service Monitor. Verify that the "SIG" Meter does not go past full scale, indicating too high a signal level, because erroneous data may be obtained with an input signal overload.

8. INPUT LEVEL Lamp. When lighted, indicates that the squelch is open. An internal static discharge protection circuit provides protection for most antenna transients.

9. DEV/PWR Meter Function Switch. In 2, 6, or 20 kHz full scale positions, right-hand meter indicates peak FM deviation of the received signal when the Test Set is in FM RCVR (receiver) or peak FM deviation of the Test Set's signal generator in FM GEN (generator) mode. In X1 or X10 watts positions, meter indicates power of the transmitter under test connected to TRANS/RCVR jack. In SIG (received signal strength) position, the meter indicates the relative signal strength of the received signal at the ANT connector.

10. GEN/RCVR Mode Switch. In GEN (signal generator) position, a RF signal is produced at the TRANS/RCVR jack. Its level is set by the RF LEVEL μV control, frequency by the FREQUENCY MHz thumbwheel, modulation type by the AM/FM switch, internal modulation frequency by the MODULATION FREQ Hz thumbwheel, and modulation level by the INT MOD (internal modulation) level control. The modulation depth or deviation is set up using the peak deviation (DEV/PWR) meter or the oscilloscope in FM mode or the oscilloscope and DEMOD OUT jack in AM mode (see paragraph 25).

    In RCVR (receiver) position, the Test Set acts as a receiver measuring the power, frequency, peak FM deviation, and sub-audible tone frequencies of the transmitter under test connected to the TRANS/RCVR jack. The above measurements excluding power and including received signal strength can also be made for remote transmitters monitored at an antenna connected to the ANT jack. The AM modulation depth of the transmitter under test can be displayed on the scope. Note: the Test Set will automatically be placed in the RCVR mode upon application of greater than 3W of RF power at the TRANS/RCVR connector.

11. ZERO RCVR Control. Zeroes the Frequency Error meter when GEN/RCVR switch is in GEN position. (Not a normal operating control).

12. 10 MHz REF OUT Connector. Output for measuring the frequency of the master oscillator.

13. 10 MHz CAL Screwdriver Adjustment. A fine adjustment of the frequency of the master oscillator.

14. NARROW/MID/WIDE Bandwidth Switch.
Detector Audio bandwidth is 8 kHz. Narrow - RCVR ± 7 kHz.
Detector Audio bandwidth is 8 kHz. Mid - RCVR ± 100 kHz.
Detector Audio bandwidth is 80 kHz. Wide - RCVR ±100 kHz.

15. EXT SPKR Connector. Connector for external speaker. Internal speaker is disconnected when a plug is inserted in this jack.

16. SQUELCH Control. Squelch control for internal RCVR except in GEN mode.

17. INT MOD/RCVR Switch. In RCVR (receiver), connects the speaker to the receiver output; in INT MOD (internal modulation), connects speaker to the internal modulation synthesizer.

18. VOL (Volume) Control. Controls level to internal or external speaker.

19. FREQUENCY MHz Thumbwheel. Selects the signal generator or receiver frequency.

20. BFO/OFF Control. When out of the detent (OFF) position, controls the frequency of an internal Beat-Frequency Oscillator (BFO) used in reception of CW, SSB, or DSB/SC modulation. When the BFO is on, the RF LEVEL/BFO INJECTION control can be used to measure the received signal strength at the ANT jack by adjusting this control until the peak of the beat between the BFO and the signal to be measured just goes to zero amplitude on the oscilloscope I.F. display. Place AM/FM switch to AM and RCVR/GEN to RCVR for this measurement.

21. AM/FM Switch. For this switch in AM and RCVR/GEN in RCVR position, the receiver's AM detector output is heard through the speaker and the 250 kHz I.F. signal is connected to the oscilloscope when its vertical sensitivity switch is in any of the kHz positions. For GEN mode, the INT (or EXT) MOD signal is connected to signal generator's AM modulator.

    For FM position, the receiver's FM demodulation output is heard through the speaker and is connected to the vertical input of the oscilloscope with full scale sensitivities of 1.5, 6, 15 kHz.

    For the FM mode, the peak deviation meter measures the FM deviation of the received signal or signal generator.

22. EXT MOD Connector. External modulation input connector. The input connection is made using a standard 3 conductor ¼" phone plug.

    The "Ring" connection is for external modulation, and the "tip" is for External Keying. For typical External Modulation levels, consult the SPECIFICATIONS sheet. In the External Keying mode, the Internal Tone Generator is ON when the connection is open and OFF when the Connection is grounded.

23. DEMOD OUT Connector. AM detector or FM demodulator output.

24. INT MOD OUT Connector. Internal modulation oscillator output. Level is controlled by INT MOD control.

25. INT MOD Control. Controls the AM depth of modulation or FM peak deviation. The AM depth can be set by connecting an ac voltmeter to the DEMOD OUT jack and noting the voltmeter reading (reference level) when the 250 kHz I.F. display on the oscilloscope is adjusted for 100% AM. The desired modulation is then set by adjusting the modulation level control until the DEMOD OUT is the desired percent times the reference voltage level measured above. Example: if 100% modulation corresponds to 3.0 volts at DEMOD jack, then 30% would correspond to 1.0V.

26. MODULATION FREQ Hz Thumbwheel. Selects the frequency of the internal modulation synthesizer.

27. SCOPE IN Connector. External vertical input for oscilloscope.

28. SWEEP Control. Controls oscilloscope horizontal sweep speed in 10, 1, .1ms/div or 10us/div rates. Since sweep is synchronized (as opposed to triggered) to the vertical signal, the small vernier control may have to be taken out of CAL to obtain a stable display.

    The extreme ccw position of the switch connects the internal modulation oscillator to the oscilloscope horizontal input to display the Lissajou pattern between a received signaling tone and the internal oscillator for tone frequency measurements.

29. AC/DC/OFF Switch. In OFF, disconnects power from the oscilloscope to conserve the batteries when so powered. In ac or dc applies internal power to the scope and ac or dc couples the scope inputs. It is necessary to pause in the off position to insure scope power supply inverter will start.

30. Oscilloscope Vertical Sensitivity Switch. On the kHz ranges, selects the sensitivity for the display of the output of the FM demodulator for measuring peak deviation of a received signal or setting up the signal generator's FM modulation. On EXT V/DIV ranges selects the sensitivity of the external input.

31. Frequency Error Range Switch. Selects the full scale sensitivity of the frequency error meter.

32. HORIZ Control. Adjusts the oscilloscope trace horizontal position.

33. VERT Control. Adjusts the oscilloscope trace vertical position.

34. FOCUS Control. Adjusts the oscilloscope trace focus.

35. INTENSITY Control. Adjusts the oscilloscope trace intensity.

36. RF Level BFO Injection-uV Control Dual Range Switch. The FM/AM-1000A, RF level control system has provisions for two output ranges. One range provides the output level indicated by the RF Level/BFO injection/uV control dial; the other range adds 40dB to the dial reading when selected. The outer (μV) dial on the RF Level/BFO injection/uV control reads from .05 to 50, the inner (-dBm) dial reads 80 to 130. The range selector switch is labeled "μv x 100", "+40dB" and "NORM".

    The dual range RF level control system has a fixed attenuator and solid state switch module mounted on the second mixer assembly. This attenuator switch is connected to the output port of the RF level control to provide the two output ranges.

    Because the selectable fixed attenuator is connected to the output port of the RF level control, the output level is either that shown on the dial or increased by 40dB depending upon the position of the range selector switch. If the +40dB range is selected, the operator must algebraically add 40dB to the -dBm setting on the dial. For example, if -80dBm is shown on the attenuator dial and the +40dB range is selected, the actual output level becomes -80dBm +40dB = -40dBm.

    The microvolt scale is simplier to use. In the +40dB range, multiply the microvolt dial reading times 100 for the output level in microvolts. In the NORM position the output level corresponds to the microvolt dial reading.

37. High Frequency Phase LOCK Lamp. This lamp to the left of LOCK indicates proper operation of the High Frequency Phase Lock Board and should be lit at all times when the FM/AM-1000A is ON.

38. Low Frequency Phase LOCK Lamp. This lamp to the right of LOCK indicates proper operation of the 79-80 MHz Phase Lock Board and should be lit at all times after the initial five minutes the FM/AM-1000A Power Switch is ON.

39. Frequency Error Meter Mechanical Zero Adjustment. Used in calibration of the Frequency Error Meter.

40. Deviation/Power Meter Mechanical Zero Adjustment. Used in calibration of the Deviation Power Meter.

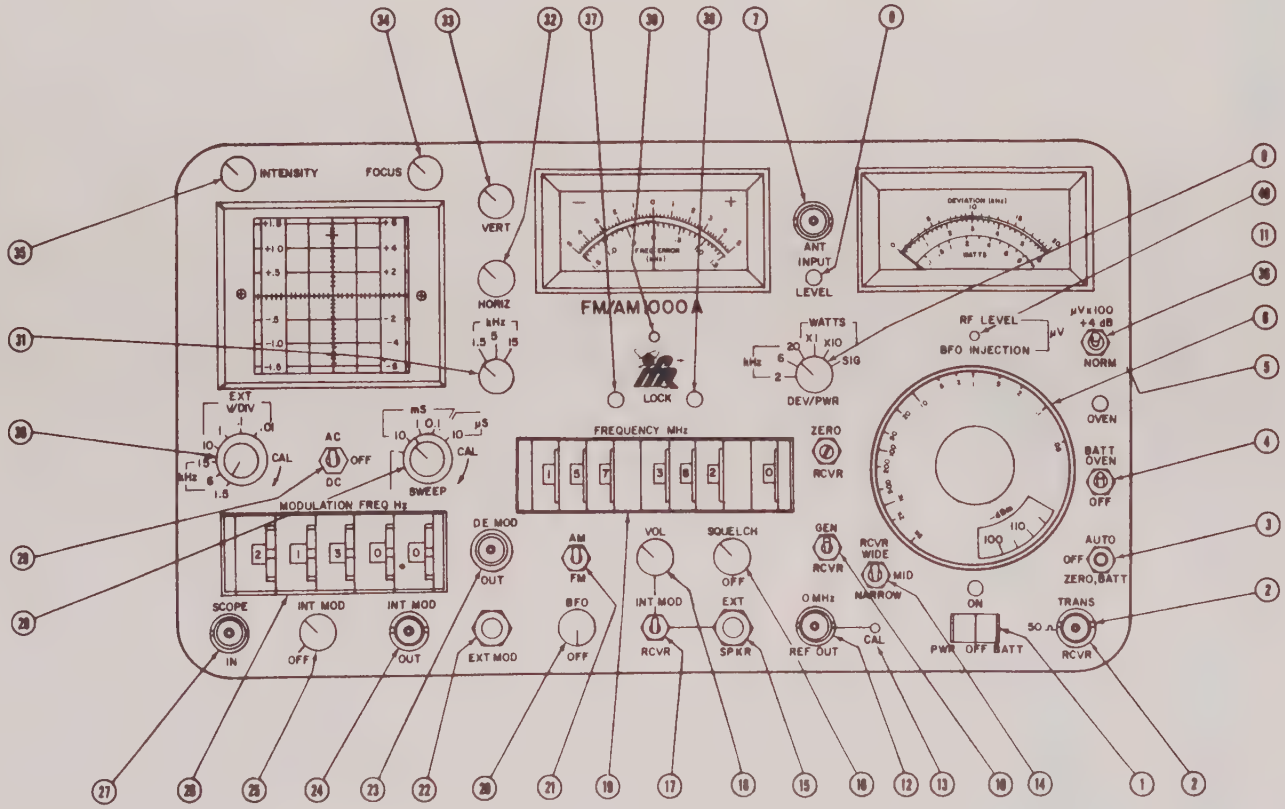

Figure 1-1

DATE	REV	CHANGE	APP'D
6-26-79	B	REDRAWN TT	

ITEM	REQ'D	PART NO	DESCRIPTION

LIST OF MATERIALS

- IFR INC -
WICHITA, KANSAS

IDENTIFICATION OF FRONT PANEL CONTROLS, INDICATORS, and CONNECTORS

SIZE	PART NUMBER	REV
C	3-23-0824	B

SHEET 1 OF 1

TESTING PROCEDURES

PRELIMINARY:

Connect transceiver under test (T.U.T.) to TRANS/RCVR jack.

Apply power to Test Set. Allow approximately 15 minutes for master crystal oscillator to stabilize (OVEN lamp will dim) for most accurate frequency measurements.

A. TRANSMITTER TESTS:

Set Controls:

RCVR/GEN . . . . . .RCVR

Oscilloscope Power . . . . .dc

Oscilloscope Vertical. . . .1.5, 6, 15 kHz sensitivity

AM/FM. . . . . .As required

SQUELCH/OFF. . . . . .SQUELCH

FREQUENCY MHz. . . . . .As required

I. Carrier Power Output. Place DEV/PWR to X1 to X10 watts range as required. Key transmitter and read carrier power on meter.

II. Carrier Frequency Error. Key transmitter and read carrier frequency error on meter at 1.5, 5, or 15 kHz scale range as required. This measurement can also be performed on a remote station from the ANT jack when the SIGNAL LEVEL lamp is on.

III. AM modulation depth is most easily observed by watching the oscilloscope display of the 250 kHz I.F. pattern, which is automatically fed to the scope with the generator AM/FM switch in the AM position.

NOTE! Amplitude of the 250 kHz I.F. display may be varied only with the scope vernier sensitivity control. This procedure is very convenient for observing speech modulation patterns.

IV. FM Deviation. Connect a microphone to the transmitter's audio input. Place the DEV/PWR to 2, 6, or 20 kHz Deviation position as required. Place WIDE/NARROW to MID or WIDE if measuring deviation above 5 kHz. Key the transmitter and speak into the microphone; or place the INT MOD/RCVR switch to INT MOD, adjust VOL and place the microphone next to the speaker opening.

The INT MOD OUT signal can also be used to modulate the T.U.T. (Note: use a dc blocking capacitor if the audio input is biased for a carbon microphone). Adjust the INT MOD control for the required modulation voltage. The fast attack, slow decay meter and the oscilloscope measure peak deviation. This measurement can also be performed on a remote station from the ANT jack.

V. Sub-Audible Tone Frequency. Place the oscilloscope SWEEP switch to MODULATOR FREQ (fully ccw). Key the transmitter and the sub-audible tone. Adjust the oscilloscope vertical sensitivity vernier control and the INT MOD control until the display has approximately equal vertical and horizontal sizes. Vary the MODULATION FREQ thumbwheel until the Lissajou pattern slows or stops, forming an ellipse. The thumbwheel setting is the sub-audible tone frequency. This measurement can also be performed on a remote station from the ANT.

NOTE: Due to receiver noise, the deviation as indicated by the meter will be higher than the actual value if the input signal strength is less than 40μV (measured at the ANT jack of the FM/AM-1000A). When this is the case, use the oscilloscope to determine the actual tone deviation.

VI. Received Signal Strength of a Remote Station (AM or FM). Connect an external antenna to the ANT jack. Tune in the station to be measured with the FREQUENCY thumbwheel. Place AM/FM to AM, oscilloscope vertical sensitivity to 6 kHz, sweep to 1.0ms/div, and adjust BFO frequency and INJECTION controls until a beat note is heard in the speaker. Adjust the INJECTION control until the peak of the beat between the BFO and the signal to be measured just goes to zero on the oscilloscope I.F. display. The μV reading on the INJECTION control is the station signal strength at the ANT jack.

B. RECEIVER TESTS

Set Controls:

RCVR/GEN. . . . . .GEN

Oscilloscope Power. . . . .dc

Oscilloscope Vertical . . .1.5, 6, 15 kHz as required
Sensitivity

AM/FM . . . . . .As required

FREQUENCY MHz . . . . . .As required

I. 20dB Receiver Quieting. Place INT MOD to OFF. Turn off the FM/AM-1000A and measure the audio output of the T.U.T. with an external ac voltmeter (reference level). Turn on the FM/AM-1000A and adjust the RF LEVEL until voltmeter reading is one-tenth the reference level and read RF LEVEL setting.

II. Carrier Type Squelch Sensitivity. With RF LEVEL at its minimum adjust squelch on T.U.T. until receiver quiets. Increase RF LEVEL until squelch opens and read RF LEVEL setting.

III. Receiver Squelch Point with Sub-Audible Tone.

Set Controls:

RCVR/GEN. . . . .GEN

Adjust INT MOD control for desired FM deviation as indicated by the oscilloscope. Reduce the RF LEVEL until the squelch on the receiver under test closes, and then advance the RF LEVEL to the point where the squelch just opens. Observe the RF LEVEL at this point.

C. SIGNAL GENERATOR CALIBRATION (Frequency).

Set Controls:

RCVR/GEN. . . . .RCVR
AM/FM . . . . . .AM

I. (WWV) Weak. Tune to any WWV frequency (2.5, 5, 10, 15 MHz). If no beat between WWV and the master oscillator (or its sub-harmonics or harmonics) is heard go to step II. If a beat is heard, adjust the 10 MHz - CAL screwdriver pot until the beat frequency is 1 Hz or less. NOTE! A one Hz beat results in a short term accuracy of:

.00004% when beating with WWV at 2.5 MHz
.00002% when beating with WWV at 5.0 MHz
.00001% when beating with WWV at 10.0 MHz

II. (WWV) Strong). Tune in WWV on 10 MHz. Insert a small whip antenna (or wire) in the 10 MHz REF OUT connector. Adjust the whip length (or wire proximity to ANT jack) until a beat is heard and adjust 10 MHz CAL Screwdriver pot for a beat frequency of 1 Hz or less. NOTE! It may be necessary to decrease the amplitude of the input RF signal by using a shorter antenna or a pad in series with the antenna jack. Input signal strength should give a meter indication in the lower quarter of the meter scale. Best adjustment results with the input WWV signal approximately equal to the internal crossfeed signal.

SECTION III

SELF CHECK OF FREQUENCY ERROR INDICATIONS

For all frequency error self checks, the AUTO ZERO/BATT switch must be in the AUTO (up) position.

3.1 Frequency Error Meter Self Checks.

3.1.1 FM/AM-1000A Control Settings:

GEN/RCVR Mode Switch	RCVR
NARROW/MID/WIDE Bandwidth Switch	NARROW
FREQUENCY MHz Thumbwheel	000.0000
AC/DC/OFF Switch	DC
VERT Control	15 kHz
Oscilloscope Vert. Sens. Sw. (Vernier)	CAL

3.1.2 Center the scope trace using the HORIZ and VERT. Controls.

3.1.3 Select 15 kHz on the Frequency Error Range Switch.

3.1.4 Change the setting of the FREQUENCY MHz Thumbwheel to 000.0100.

3.1.5 Verify that both the scope and the Frequency Error Meter read negative 10.0 kHz.

3.1.6 Other scope and meter ranges maybe checked in a similar manner.

3.2 Self Check Deviation/Power Meter.

Checking the Zero of the Meter.

- FM/AM-1000A Control Settings:

GEN/RCVR Mode Switch	RCVR
NARROW/MID/WIDE Bandwidth Switch	NARROW
FREQUENCY MHz Thumbwheel	000.0000
DEV/PWR Meter Function Switch	2.0 kHz

- Deviation/Power Meter should indicate zero.

3.2.2 Deviation/Power Meter Calibration Check.

- FM/AM-1000A Control Settings:

GEN/RCVR Mode Switch	GEN
NARROW/MID/WIDE Bandwidth Switch	MID
FREQUENCY MHZ Thumbwheel	000.0500
DEV/PWR Meter Function Switch	20.0 kHz
INT MOD Control	OFF (full ccw detent)

- Set the MODULATION FREQ Hz Thumbwheel at 1 kHz.
- Adjust the INT MOD Control level to ±10 kHz, observing the scope.
- NOTE: The vernier gain of the Oscilloscope Vertical Sensitivity Switch must be at max. cw.
- Select 20 kHz on the DEV/PWR Meter Function Switch.
- Meter should indicate 10 kHz.
- Move the Oscilloscope Vertical Sensitivity outer knob from 15 to 6 kHz.
- Reduce the INT MOD Control to ±6 kHz, observing the scope.
- Select the 6 kHz setting on the DEV/PWR Meter Function Switch.
- The Deviation/Power Meter should indicate 6 kHz.
- Reduce the INT MOD Control to a presentation of ±2.0 kHz on the scope.
- Set the DEV/PWR Meter Function Switch to 2.0 kHz.
- The Deviation/Power Meter should indicate 2.0 kHz.

3.3 Self Check Output Level.

3.3.1 FM/AM-1000A Control Settings:

GEN/RCVR Mode Switch	GEN
RF Level/BFO Injection/µV Control Dual Range Switch	+40 dB
RF LEVEL/BFO INJECTION/µV Control	1K µV
FREQUENCY MHz Thumbwheel	000.0500
Vertical Sensitivity Switch	.01 V/Div
(Outer Knob)	external on scope
(Vernier)	CAL (max cw)

3.3.2 Connect a short BNC-BNC coax from the TRANS/RCVR Connector to the SCOPE IN Connector.

3.3.3. Scope display should be 0.7 (±0.25) division high.

SECTION IV

THEORY OF OPERATION

4.1 Introduction.

4.1.1 This section contains the circuit theory of operation of the FM/AM-1000A. Included are general description and a main individual circuit description.

4.2 General Description.

4.2.1 The FM/AM-1000A is a digitally synthesized AM, FM, and SSB receiver and low power signal source. The unit is solid state except for the CRT display. It contains a quadruple conversion super heterodyne receiver and a low power signal generator designed to generate communications signals from 1.0 kHz to 999.9999 MHz.

4.3 General Circuit Theory.

4.3.1 The receiver is tuneable from the front panel from 300.0 kHz to 999.9999 MHz in 100 Hz increments. The first I.F. frequency is variable from 1199.0001 MHz to 1200.0000 MHz as the left hand three thumbswitches of the FREQUENCY MHz Thumbwheel are switched from 999 to 000.

4.3.2 The First Local Oscillator operates in 1 MHz increments from 1200 MHz to 2199 MHz as the left three thumbswitches are switched from 000 to 999.

4.3.3 The output of the Second Local Oscillator is variable from 1079.0001 to 1080.0000 MHz as the right hand four digits are thumbswitched from .9999 to .0000. The Second Local Oscillator (Approximately 1080 MHz) beats with the first I.F. (Approximately 1200 MHz) to produce the second I.F. of 120 MHz.

4.3.4 A beat frequency oscillator injection signal is injected into the "Second Mixer Diode Switch" for received signal level measurements and receiving of SSB and CW signals. A 10 MHz crystal is pulled approximately ±208 Hz from 10 MHz, and is multiplied by six and by two to produce 120 MHz ±2.5 kHz. This circuitry is in the GEN module. The injection level is selected by the front panel RF LEVEL/BFO INJECTION /µV Control.

4.3.5 The Third Local Oscillator is a crystal oscillator to 109.3 MHz which beats with the 120 MHz I.F. to produce the third I.F. of 10.7 MHz.

4.3.6 The Fourth Local Oscillator is a crystal oscillator that produces a 10.950 MHz signal which beats with the 10.7 MHz I.F. to produce a Fourth I.F. of 250 kHz.

4.3.7 The 250 kHz I.F output is demodulated for FM by a pulse counter operating at 250 kHz or diode detected for AM output.

4.4 Frequency Control System for the First Local Oscillator (1200-2199 MHz).

4.4.1 Control for the First Local Oscillator starts with a 10 MHz signal from the oven stabilized Master Oscillator operating at 10 MHz ±.00005%. This 10 MHz signal is multiplied ten times in the 100 MHz Multiplier and 108 MHz Mixer Module (see block diagram Fig. 6-30). The 100 MHz signal is fed through a filter amplifier and then into a 100 MHz amplifier which drives a snap diode. Harmonics of the snap diode are selected by five tuned filters: 1100 MHz, 1300 MHz, 1500 MHz, 1700 MHz, and 1900 MHz. Diode switches select which filter output drives the single diode mixer. The mixer is also driven with a signal from the First Local Oscillator (1200-2199 MHz). When the Local Oscillator is operating from 1200-1399 MHz, the output of the 1100 MHz filter is selected to mix with the Local Oscillator. The mixer produces an output of 100-299 MHz. As the First Local Oscillator is operating from 1400-1599 MHz, the 1300 MHz filter is selected. There are five bands in which the First Local Oscillator operates in this manner. In each of these bands, the mixer output is always 100-299 MHz. This 100-299 MHz signal is divided by two in the Heterodyne amplifier and Divide by Two Prescaler. The prescaler output (50-149.5 MHz) feeds the program divider and phase lock loop which controls the First Local Oscillator frequency. The left hand three digits of the front panel thumbswitches control this program divider.

4.5 Frequency Control System for Second Local Oscillator (1079.0001-1080.0000 MHz).

4.5.1 10 MHz from the oven stabilized Master Oscillator is multiplied to 100 MHz in the 100 MHz Multiplier and 108 MHz Mixer Module. A front panel controlled phase locked loop, operating from 79.0001-80.0000 MHz and then divided by 10, is mixed with 100 MHz in the 100 MHz Multiplier and 108 MHz Mixer Module to produce 107.90001-108.0000 MHz. This signal is filtered further by a passive 108 MHz filter and fed on to the 1080 MHz Multiplier Amp Module, which multiplies this signal ten times to produce 1079.0001-1080.0000 MHz at a typical level of +5 dBm.

4.6 Audio Modulation Generator (5 Hz to 9999.9 Hz).

4.6.1 A heterodyne system produces the audio tone output by mixing a 20 kHz reference signal with approximately 20-30 kHz. The result is approximately a 5 Hz-10 kHz output after passing through a low pass filter. A 2-3 MHz, (actually 2.0005-2.9999 MHz), oscillator output frequency is divided by one hundred to derive the 20-30 kHz signal. A phase locked loop controlled by the MODULATION FREQ Hz Switch controls this 2-3 MHz oscillator. A selected audio modulation frequency of 0000.0 Hz produces 2.0000 MHz and a selected audio frequency of 9999.9 Hz produces 2.9999 MHz.

4.7 Clock Divider Circuit.

4.7.1 10 MHz from the oven stabilized Master Oscillator is divided to lower frequencies by TTL dividers to be used for the following reference frequencies:

1. 20 kHz - Audio Modulation Generator
2. 10 kHz - 120 MHz FM/AM Generator Module
3. 100 Hz - Low Frequency Phase Lock Loop (79.0001-80.0000 MHz ÷ 10 = 7.90001-8.00000)
4. 10 Hz - Audio Modulation Generator

4.8 Oscilloscope.

4.8.1 The horizontal deflection plates of the CRT are controlled by a differential amplifier consisting of Q3414, Q3415, and Q3416. Q3415 provides a constant current source to the differential pair consisting of Q3414 and Q3416, which drives the left and right-hand deflection plates, respectively. A reference voltage from the HORIZ Control is applied to Q3416. Q3414 is driven by either the scope's internal Horizontal Sweep Generator or by the Audio Modulation Generator as selected by the SWEEP Control.

4.8.1.2 The sweep generator is a sawtooth generator consisting of a constant current source, a flip-flop, a buffer amplifier, a trigger, a clamp, and a horizontal retrace blanker. The flip-flop, consisting of Q3408 and Q3409, starts out with Q3408 in the "off" state and Q3409 in the "on" state. A Ground Path is provided for one of four timing capacitors by the front panel SWEEP Control. This capacitor is charged through the constant current source (Q3412) and as it charges, the base voltage of the buffer amplifier (Q3413) becomes more positive, allowing the emitter to become more positive. This turns the left-hand leg of the differential driver (Q3414) on in a linear fashion, causing the beam to sweep across the tube. At the same time, the emitter of the trigger (Q3407) is going positive to a level set by the voltage on the base through the trigger amp (X3402). When the timing capacitor charges to the trigger voltage Q3407 conducts. This supplies a trigger voltage to a flip-flop consisting of Q3408 and Q3409. This turns on Q3408, which in turn turns Q3409 off. The collector of Q3409 drives the clamp and the blanker. When Q3409 turns off, the blanker (Q3410) and clamp (Q3411) turn on. The clamp provides a ground path to discharge the timing capacitor. As the timing capacitor discharges to near zero volts, CR3405 turns off Q3408 which resets the flip-flop. Resetting the flip-flop turns off the clamp and blanking transistors and allows the timing capacitor to start charging.

4.8.2 Vertical Deflection Circuit and Vertical Pre-Amplifier.

4.8.2.1 The vertical deflection plates of the CRT are controlled by a differential amplifier consisting of Q3404, Q3405, and Q3406. Q3404 and Q3405 are the differential amplifier and Q3406 is a constant current source. Q3405 drives the bottom deflection plate and is the reference. Vertical centering is accomplished by a front panel control, VERT Control, which adjusts the reference voltage input to Q3405, the reference leg of the differential amplifier. Q3404 receives its signal from the vertical amplifier. When the inputs to Q3404 and Q3405 are at equal levels, the beam on the CRT will be centered.

4.8.2.2 The vertical amplifier is an operational amplifier (X3403) fed by a differential FET Amplifier (Q3402) to provide a high impedance input.

4.8.2.3 X3401 and Q3401 are a +11 V Regulator for the oscilloscope functions. CR3418 and CR3419 provide high voltage protection to the FET input.

4.9 Power Supply

4.9.1 Rear Panel (Fig. 6-4)

4.9.1.1 In the AC Mode of operation T18001 provides taps for 110 or 220 V ac and drops it down to approximately 15.0 V ac. It is then rectified by CR18001 and filtered by C18001 to provide 18.0 V dc at 4.5 Amps. This 18 V supply feeds the oscillator oven and the duty cycle regulator when the front panel Power Switch is in the PWR position.

4.9.1.2 External dc from 12-23 V dc can also be fed to the same point that the ac power supply feeds.

4.9.1.3 The battery can also be charged directly from an external source through CR18001 which prevents discharge of the battery through the external source.

4.9.2 Duty Cycle Regulator and Battery Charger (Fig. 6-11).

4.9.2.1 The battery charger circuit is a current regulator consisting of X5102, Q5110 and Q5111. The op-amp (X5102) senses battery voltage and provides a control voltage through Q5111 to Q5110. Q5111 provides a low impedance output to the op-amp. Q5110 is a series regulator controlling the current from the raw dc out of the power supply to the battery.

4.9.2.2 The Duty Cycle Regulator's driving oscillator is a 20 kHz multivibrator which has a square wave output that is changed into a modified sawtooth by C5113 and Q5105. Q5105 is a constant current source. The modified sawtooth is fed into the inverting input of the op-amp X5101. The noninverting input of X5101 sets the level at which X5101 switches. The output is a square wave with a duty cycle responsive to the dc voltage on the noninverting input of X5101. Q5101 provides a constant current source and CR5109 is a 6.2V regulator used for the multivibrator and for a reference transistor (Q5109). If the 12V secondary of the transformer is too high the collector of Q5109 goes higher increasing the reference voltage on the noninverting input on the op-amp. This sets the cutoff higher up the ramp shortening the duty cycle which shortens the charging time on the primary of T5101 which will lower the output voltage on the secondary and maintain 12V dc. If the 12V output is loaded so that the voltage is low, the reference will go low which will lower the switching point on the ramp lengthening the pulse which will increase charging on the transformer which will increase the current capacity of the secondary increasing the secondary to 12V. The drive circuit consists of Q5106, Q5107, Q5108, Q5102 and Q5112. Q5106 is a buffer driver which supplies the current necessary to switch on the parallel drivers. This current goes through a two turn winding so that the bases of the outputs can go below ground in order to turn on the power taansistors fully. R5115 adjusts the base level of Q5109 which sets the +12V output.

4.10 Operation as a Signal Generator (Fig. 6-16 and 6-59)

4.10.1 As a signal generator, the signal originates in the 10 MHz oven stabilized master oscillator and is divided down to 10 kHz in the "Clock Divider" module, then fed as a reference signal to the "120 MHz FM/AM Generator" module. In the "120 MHz FM/AM Generator" module, 120 MHz is produced by mixing a 54.78 MHz crystal oscillator with a 5.22 MHz FM oscillator to produce 60 MHz, then multiplying by two. FM modulation of ± 7.5 kHz is imposed on the 5.22 MHz VCO which then becomes ± 15 kHz at the 120 MHz output stage because of the frequency doubling stage. The 60 MHz signal is phase locked to the incoming 10 kHz reference from the clock divider.

4.10.2 Refer to figure 6-16. The Second Mixer is fed in reverse by the 120 MHz FM/AM Generator's output after being attenuated by the front panel RF Level Control. The 1199.0001-1200.0000 MHz I.F. system is also reversed by a diode switch so that the First Mixer is now a signal Generator from 100 Hz to 999.9999 MHz. This signal passes through the transfer relay, now in the generator mode, and passes through a 20 dB pad, and then to the front panel "TRANS/RCVR" jack. The level at this jack is from -33 dBm to -133 dBm into a 50 ohm load.

SECTION V

PERFORMANCE EVALUATION

5.1 Introduction.

5.1.1 This section contains procedures to verify the proper performance of the FM/AM-1000A. If the unit fails to meet the performance as outlined in this section refer to the appropriate calibration section of this manual.

5.1.2 This instrument has been tested and calibrated at the factory prior to shipping and should only require periodic inspection and calibration. DO NOT attempt any adjustment except as specified in the calibration section of this manual and then only with a thorough understanding of the theory of operation.

5.1.3 Case Disassembly. (Not required for general evaluation).

5.1.3.1 Remove the four Phillips screws that hold the support bars to the legs and remove the bars. Remove the eight Phillips screws around the outside perimeter of the rear of the case. Remove the top Phillips screw at the front center top of the case. Remove the Phillips screw at the front center bottom of the case. Set the unit on its legs and slide the case back. Lift the unit out of the case.

5.2 Signal Generator Calibration (Frequency).

5.2.1 Before applying power, ensure that both panel meters are mechanically zeroed. Set the RCVR/GEN switch to RCVR, and the AM/FM switch to AM. Connect external antenna to antenna input connector. Ensure that AUTO ZERO/BATT switch is in AUTO position.

5.2.2 Tune to any WWV frequency +1 kHz (2.5, 5, 10, or 15 MHz). If no beat between WWV and the Master Oscillator is heard because of strong WWV signal, go on to paragraph 5.2.3. If a beat is heard, adjust the 10 MHz-CAL screwdriver pot on front panel until the beat frequency is 1 Hz or less.

NOTE

A one Hz beat results in a short term accuracy of .0004% when beating with WWV at 2.5 MHz, .00002% when beating with WWV at 5.0 MHz, .00001% when beating with WWV at 10 MHz.

5.2.3 Tune in WWV on 10 MHz +1 kHz. Insert a small whip antenna (or wire) in the 10 MHz REF OUT Connector. Adjust the wire length (or whip proximity to antenna jack) until a beat is heard and adjust the 10 MHz CAL screwdriver pot for a beat frequency of 1 MHz or less.

NOTE

When not using the procedure in 5.2.3, it may be necessary to decrease the input of the RF signal when WWV is strong by using a shorter antenna or pad in series with the antenna jack. The input signal strength should give a meter indication in the lower quarter of the meter scale. Best adjustments result with the input WWV signal approximately equal to the internal crossfeed signal.

5.3 Self Check of Frequency Error Meter.

5.3.1 Set RCVR/GEN switch to RCVR position, set FM/AM switch in FM, set bandwidth switch in narrow band position and select 000.0000 frequency. Position AUTO ZERO/BATT switch to AUTO for remainder of the Evaluation Procedure. Center the scope trace, zero the frequency error meter, and select 15 kHz range. Select 000.0100 MHz and verify the frequency error meter indicates a negative 10.0 kHz (± 10%). The scope should indicate negative 10 kHz (± 5%). Select 1.5 kHz scale on Frequency Error Meter range selector switch. Select GEN position and re-zero Frequency Error Meter using front panel ZERO RCVR screwdriver control if necessary. Other scope and meter ranges can be checked in a similar manner.

NOTE

FREQ ERROR meter may be positioned off zero when the squelch isn't opened. This offset does not represent an error or malfunction. FREQ ERROR meter zeroing should be evaluated in the generate function.

5.4 Self check of Deviation Meter. Use actual scope reading obtained in 5.3.1 as reference for deviation meter checks. By doing this the Deviation Meter is referenced directly to the frequency synthesizer.

5.4.1 Select the RCVR position of the RCVR/GEN switch. Select narrow band operation with the bandwidth switch. Select 000.0000 MHz. Select the 2.0 position on the deviation meter switch. The deviation meter should indicate zero (± 100 Hz).

5.4.1.1 Switch to GEN Mode, set bandwidth switch to mid, turn Internal Modulation off, select 2 kHz scale on deviation meter and observe that meter indicates zero (± 50 Hz), and select 20 kHz on deviation meter. Select 1 kHz on Internal Modulation frequency

select thumbswitches and adjust INT MOD level for a scope indication of "+" and "-" 10 kHz. The DEV meter should indicate 10 kHz (±7%). Reduce INT MOD for a scope indication of "+" and "-" 5 kHz. Select 6 kHz scale on the DEV meter. The deviation meter should indicate 5 kHz (± 7%). Reduce INT MOD for a scope indication of "+" and "-" 2 kHz. The deviation meter should indicate 2.0 kHz (± 10%).

5.5 Self Check of Output Level.

5.5.1 Select GEN Mode, adjust output attenuator for 1K µV, select 000.0500 MHz on the frequency MHz thumbswitches. Select External Input at .01V/DIV on scope and ensure that the vertical vernier is in CAL position. Connect a short BNC to BNC coax from RF output to scope input. The scope display should be 0.7 divisions high (± 0.25 divisions).

5.6 Check of RF Power Meter.

5.6.1 Using short lengths of coaxial cable connect a 5-10 watt VHF transmitter with a 150 MHz range to the input of an in-line RF power meter with a verified accuracy of ± 5%. Connect the output of the RF power meter to the TRANS/RCVR input of the unit. Select X1 watts on "DEV/PWR" switch. Key transmitter and read power output on the in-line watt meter. Check that FM/AM-1000A indicates the same, ±10%.

5.6.2 Perform the same test on the X10 watts range with a 50-90 watt transmitter.

5.7 Check for holes in Synthesizer Operation.

5.7.1 Set frequency select MHz thumbswitches to 000.0000 MHz. Set RCVR/GEN switch on RCVR position, set FM/AM switch in FM position, and set bandwidth switch in NARROW position. Select the 1.5 kHz range on the kHz frequency error range switch. Center the scope trace and select the 1.5 kHz range. Step the 100 Hz frequency select switch through its range and check that the frequency error meter steps in approximately 100 Hz negative steps for each increment. Select the 15 kHz range on the scope and on the frequency error meter. Step the 1 kHz frequency select thumbswitch through its range and check that the FREQ ERROR meter and the scope indications move negative in approximately 1 kHz increments for each step. On the 15 kHz range, turn the scope vernier full counterclockwise and center trace, bandwidth on wide, and step the 10 kHz thumbswitch through its range and check that the scope trace moves in equal negative increments of the thumbswitch.

5.7.2 Switch to GEN mode. Using a short length of coax connect scope input to TRANS/RCVR output. Set attenuator at maximum. Select 0.1V/DIV on vertical (ensure vernier is in CAL position). Select 10us/DIV horizontal. Step 100 kHz thumbswitch through its range and assure sinewave display changes 100 kHz each step.

5.7.3 If an external scope is available with a bandwidth of 50 MHz or greater, connect TRANS/RCVR output to vertical input of the scope. Use most sensitive range and adjust output attenuator for a usable amplitude. Select a sweep that produces a usable sine display, step the 1 MHz thumbswitch through its range and assure that the scope display changes each step. Depending on the bandwidth of the scope used, you may use this set up to check the 10 MHz decade in a similar manner.

NOTE

It may be necessary to put a BNC Tee connector on the input of the scope and terminate the open end of the Tee into a 50 ohm load in order to get a constant output from the generator.

5.8 Tone Generator Performance.

5.8.1 Using a short length of coax connect INT MOD OUT to SCOPE IN. Set Ext V/DIV to 1. Set SWEEP to 10ms. Set AC/OFF/DC switch to DC. Set MODULATION FREQ Hz switch to 1000.0 Hz. Set INT MOD control to give a scope indication of "+" and "-" 1.5V. Select 0010.0 on MODULATION FREQ Hz switch and adjust SWEEP vernier for a single sine wave on the scope. Select 0011.0 Hz through 0019.0 Hz on MODULATION FREQ Hz thumbswitches and observe that the frequency increases for each increment. Return MODULATION FREQ Hz thumbswitches to 0010.0 Hz. Step the 10 Hz thumbswitches through its range. The scope will indicate a new sine wave for each increment up to 0090.0. Select 0100 Hz, set the SWEEP to the 1ms range, and adjust the SWEEP vernier for a single sine wave as above. Step through the 100 Hz range. Each increment will add an additional sine wave up to 0900.0. Select 1000.0 Hz. Set SWEEP to .1ms range. Adjust vernier to display a single sine wave. Step through the 1 kHz range. Each increment will add an additional sine wave. The amplitude will vary through the range of the oscillator.

5.9 Power Supply Evaluation. (Remove case)

5.9.1 Back Panel. (Fig. 6-5)

A. With the set operating on line voltage, measure the +12 volt supply at pin E of the Regulator and Power Supply Board Connector J-17 (See Fig. 6-1-2 and 6-7 for connector pin layout) or at the red wire connection on J-3, located just to the right of J-17 (Fig. 6-1-2). The voltage should be +12.2 volts (typically +12.1 to +12.3 volts).

B. Measure the +5 supply at the orange wire connection on J-3. The voltage should be between +4.7 to +5.25 volts.

C. Measure the -39 volt supply with scope on and off at J-17 pin 7. The voltage should be between -37 to -45 volts while operating on line voltage or on battery power.

D. Using a scope, check the 20 kHz ripple on all dc supplies. Maximum allowable ripple voltage is 75mV P-P.

E. Disconnect rear panel battery and disconnect line cord. Connect external power supply to "+" terminal of battery connector and "-" side to test set chassis and set external power supply to 14 volts (± 0.3V). Press BATT TEST switch on front panel. Check panel meter for identical voltage (± 0.3V).

F. Turn on battery timer by momentarily depressing the POWER SWITCH to the BATT side. Battery timer "turn-on" should be indicated by test set operation. Slowly reduce external power supply voltage from 14 volts to approximately 11 volts. Battery timer and relay should shut off at external voltage of 11.15 volts to 10.8 volts. For this test, the external power supply must be capable of supplying 10 amps with a maximum ripple voltage of 0.2 volts P-P. Output impedance of the power supply should be quite low to prevent external power supply voltage instability as the input voltage is reduced and the test set duty cycle regulator compensates. For example, when the test set's input voltage decreases, the duty cycle regulator will increase the current drain from the external power supply to maintain constant power consumption. This will cause some external power supplies to become unstable. The start-up surge current of the duty cycle regulator is quite high and may cause some external power supply's current limiting to shut down.

G. Increase external power supply voltage to 14 volts. Turn on the BATT OVEN switch. Observe that the oven light comes on. Slowly reduce external power supply voltage toward 11 volts. Oven light should go out between 11.15 and 10.8 volts.

5.9.2 Power Supply and Regulator Board.

A. With the set operating on line voltage, measure the +11 volts supply at pin 5 of J-27, the Regulator and Power Supply Board Connector (see Fig. 6-1-2) (see Fig. 6-7 for connector pin layout). Voltage should be between 10.93 and 11.07 volts.

B. Measure -35 volt supply at the Regulator and Power Supply connector pin 11 (J-17). Voltage should between -34.5V and -35.5V.

C. Measure -12 volts supply at the Regulator and Power Supply Board connector pin 15 (J-17). Voltage should be between -10.5 and -13 volts.

SECTION VI

CALIBRATION

6.1 Introduction.

6.1.1 The purpose of this section is to give the technician a guide for correcting calibration errors discovered during performance checks (Section 5) of the FM/AM-1000A. A quality spectrum analyzer covering 10 MHz to 2.2 gHz, a well calibrated signal generator, and a 40 MHz oscilloscope are required for complete calibration and service of the FM/AM-1000A. Therefore, this section will be directed toward those portions of the unit that can be calibrated with the average communications shop's equipment.

6.2 Oscilloscope Calibration.

6.2.1 With power off, assure that both meters are mechanically zeroed. Select 000.0000 on FREQUENCY MHz thumbswitches. Select Receive. Select narrow band. Unless stated otherwise, set AUTO ZERO/BATT switch to AUTO for the entire calibration procedure. Zero Frequency Error meter with front panel screwdriver adjustment. Select 15 kHz range on scope Vertical Sensitivity switch. Select scope power to dc position. Center scope trace vertically. Select 000.0100 on FREQUENCY MHz thumbswitches. Scope should show "-" 10 kHz (± 0.5 kHz). If not adjust SCOPE DEVIATION pot (R44) (Fig. 6-76) for "-" 10 kHz indication on scope.

6.3 Receiver Narrow band/Wide band gain adjustment.

6.3.1 With no antenna connected, select AM. Select 155.5000 on FREQUENCY MHz thumbswitches. Select Narrow band. Select Receive. Adjust NARROW BAND ADJUST gain pot (R-8) (Fig. 6-76) upward until Signal Strength meter just moves. Note the RF noise level on the scope. Decrease NARROW BAND ADJUST gain pot (R-8) until RF noise level is reduced by 50%.

6.3.2 With no antenna connected, select AM. Select 155.5000 on FREQUENCY MHz thumbswitches. Select Wide band. Select Receive. Adjust WIDE BAND ADJUST gain pot (R-7) (Fig. 6-76) upward until Signal Strength meter just moves. Note the RF noise level on the scope. Decrease WIDE BAND ADJUST gain pot (R-7) until RF noise level is reduced by 50%.

6.4.3 AGC Adjustment. Select Narrow band. Select Receive. Select 155.5000 on FREQUENCY MHz thumbswitches. Assure that BFO is off. Select AM. Inject a signal of -6 dBm to the antenna input jack. Adjust AGC adjustment pot (R-80) (Fig. 6-76) until the RF level on the scope increases beyond AGC control. Adjust AGC adjustment pot (R-80) back to the point where AGC gains control of scope RF indication. (This is the point at which further downward adjustment of R-80 has no effect). Reduce input signal level to -25 dBm. If signal strength meter indication is above full scale, adjust R-80

to reduce meter indication to full scale. If meter indication is less than full scale, do not change R-80.

6.4 Frequency Error Meter zeroing Adjustment (Setting automatic zeroing circuit to proper operating range).

6.4.1 Assure that both meters are mechanically zeroed with power off. Select Generate. Select Narrow band. Select 1.5 kHz range on Frequency Error meter range select switch. Adjust front panel zero adjustment (screwdriver adjustment) to zero Frequency Error meter. (Range of adjustment is approximately ± 600 Hz). If Frequency Error meter cannot be zeroed with front panel control because it is not out of range, return front panel zero adjustment control to Mid position. Monitor Test Point (TP) (Fig. 6-76) on 250 kHz IF Monitor and Audio Board with voltmeter or oscilloscope and observe voltage to be +1 volt (± 0.5V). If not, adjust FREQUENCY ERROR ZERO pot (R-27) slowly clockwise to increase voltage or counter-clockwise to decrease voltage. While adjusting R-27 for automatic zeroing pulse (every 1.5 seconds) until voltage indication is steady at +1V (± 0.5V). The automatic zeroing range voltage indication at the Test Point (TP, Fig. 6-76) is +6 volts to -7 volts. Outside of this range, automatic zeroing is inoperative. Select Wide band. Voltage at Test Point should be between +1 and -2.5 volts. (Typically, from +1 volt to -1 volt when switching from Narrow band to Wide band). The front panel Frequency Error meter should then be zeroed with front panel zero adjustment control. Switch to RCVR, turn SQUELCH full clockwise, and adjust R-109 to zero Frequency Error meter indication.

6.5 Frequency Error Meter Calibration.

6.5.1 1.5 kHz Adjustment. Select Receive. Select 000.0000 on FREQUENCY MHz thumbswitches. Zero Frequency Error meter using front panel screwdriver zeroing adjustment control. Select 1.5 kHz on Frequency Error Range switch. Select 000.0010 on FREQUENCY MHz thumbswitches. Frequency Error meter should indicate "-" 1 kHz (± 10%). If not, adjust 1.5 kHz FREQUENCY ERROR pot (R-42) (Fig. 6-76 for a "-" 1 kHz (± 10%) meter indication.

6.5.2 5 kHz Adjustment. Select 5 kHz on Frequency Error Range Switch. Select 000.0050 on FREQUENCY MHz thumbswitches. Frequency Error meter should indicate "-" 5 kHz. (± 10%). If not, adjust 5 kHz FREQUENCY ERROR pot (R-41) (Fig. 6-76) for a "-" 5 kHz (± 10%) meter indication.

6.5.3 15 kHz Adjustment. Select 15 kHz on Frequency Error Range Switch. Select 000.0100 on FREQUENCY MHz thumbswitches. Frequency Error meter should indicate "-" 10 kHz (± 10%). If not, adjust 15 kHz FREQUENCY ERROR pot (R-39) (Fig. 6-76) for a "-" 10 kHz (± 10%) meter indication. Select Generate. Select 1.5 kHz scale on Frequency Error Meter range select switch. Touch up meter zero with front panel screwdriver zero adjustment if necessary.

6.6. Frequency Deviation Meter Calibration. (Oscilloscope calibration must be completed prior to meter calibration).

6.6.1 Select Receive. Select Narrow band. Select 000.0000 on FREQUENCY MHz thumbswitches. Select 2 kHz on DEV/PWR Meter Function switch. Adjust RECEIVER DEVIATION ZERO pot (R-52) (Fig. 6-76) for zero Frequency Deviation meter indication. Select Generate. Select Mid band. Turn Tone generator off by rotating INT MOD Control fully counterclockwise. Ensure that 2 kHz is selected on DEV/PWR Meter Function Switch. Adjust GENERATOR DEVIATION ZERO pot (R-70) (Fig. 6-76) for zero Frequency Deviation meter indication (± ½ needle width). Select 15 kHz on scope Vertical Sensitivity Switch. Center scope trace. Select 20 kHz on DEV/PWR Meter Function switch. Select 1000.0 Hz on MODULATION FREQ Hz thumbswitches and set level with INT MOD control until scope shows + and - 10 kHz. Adjust 20 kHz DEVIATION ADJUST pot (R-68) (Fig. 6-76) until Frequency Deviation meter indicates 10 kHz (± 0.1 kHz). Select 6 kHz on scope Vertical Sensitivity switch. Reduce the 1000.0 Hz on scope to + and - 6 kHz deviation with INT MOD control. Select 6 kHz range on DEV/PWR Meter Function Switch. Adjust 6 kHz DEVIATION ADJUST pot (R-66) (Fig. 6-76) until Frequency Deviation meter indicates 6 kHz (± 0.1 kHz). Reduce 1000.0 Hz level on scope to + and - 2 kHz. Select 2 kHz on DEV/PWR Meter Function switch. Adjust 2 kHz DEVIATION ADJUST pot (R-64) (Fig. 6-76) until Frequency Deviation meter indicates 2 kHz (± 0.05 kHz).

6.6.2 If there are problems in obtaining desired results, contact IFR Customer Service Department.

6.7 RF Power Meter Calibration

6.7.1 0-10W Adjustment. Refer to Figure 6-9. Select 0-10W (X1) range on DEV/PWR Meter Function Switch. Adjust ZERO POWER ADJUSTMENT pot (R-4241) (Fig. 6-9) to zero the RF POWER METER indication. Using short lengths of coax cable, connect a 5 to 10 watt VHF transmitter to the input of an inline wattmeter with a known accuracy of 5%. Connect the output of the wattmeter to the TRANS/RCVR input of the FM/AM-1000A. Select Receive mode of operation. Key the transmitter and observe the forward power on the inline wattmeter. Adjust the 0-10W ADJUSTMENT pot on the Power Supply Regulator board (R-4244) (Fig. 6-9) until the front panel RF POWER METER indication agrees with the inline wattmeter.

6.7.2 0-100W Adjustment. Refer to Figure 6-9. Select 0-100W (X10) range on DEV/PWR Meter Function switch. Assure that RF POWER METER indication is zero. If not, adjust ZERO POWER ADJUSTMENT pot (R-4241) (Fig. 6-9) to zero the RF POWER METER indication. Using short lengths of coax cable connect a 50 to 60 watt VHF transmitter to the input of an inline wattmeter with a known accuracy 5%. Connect the output of the wattmeter to the TRANS/RCVR input of the FM/AM-1000A. Select Receive mode of operation. Key the transmitter and observe the forward power on the inline wattmeter. Adjust the 0-100W ADJUSTMENT pot (R-4242) on the Power Supply Regulator board (Fig. 6-9) until the front panel RF POWER METER indication agrees with the inline wattmeter.

6.7.3 If adjustment using normal shop equipment is not possible, contact IFR Customer Service Department.

6.8 Power Supply Calibration FM/AM-1000A. (Re: Power Supply Evaluation, Section 5).

6.8.1 Remove ac line cord and pull battery (or regulator) fuse to prevent damage from accidental shorts while removing duty cycle regulator cover. Remove back cover from Duty Cycle Regulator mounted on speaker side of back panel by removing four screws. The Duty Cycle Regulator board is attached to the cover.

A. Prior to the applying power, insert battery (or regulator) fuse, With the set operating on line voltage, measure the +12 voltage at pin E of the Regulator and Power Supply Board Connector, J-17 (Fig. 6-1-2) (see Figure 6-7 for connector pin layout). Voltage should be +12.2 volts (typically +12.1 to +12.3 volts). Adjust R-5115, the 1K pot, on the Duty Cycle Regulator board for +12.2 volts (Fig. 6-12).

B. +5 volt supply value is set by +12V adjustment and should be +4.7 to +5.25 volts on orange wires on J-3, located just to the right of J-17 (Fig. 6-1-2).

C. -39 volt supply value is set by +12V adjustment and should be between -37 to -45 volts at J17 pin 7 with scope on and off while operating on line or battery.

D. If more than a 75mV ripple is present on dc supply voltages, trouble in the filters is indicated.

E. Disconnect rear panel battery and disconnect line cord. Connect external power supply to "+" terminal of battery connector and "-" side to test set chassis and set external power supply to +14 volts (± 0.3V). Press BATT TEST switch on front panel. Panel meter should indicate 14V (± 0.3V). If not, adjust BATTERY METER ADJUSTMENT pot (R-4227) (Fig. 6-9) until panel meter indicates +14 volts (± 0.3 V).

F. Turn on battery timer by momentarily depressing the POWER SWITCH to the BATT side. Battery timer "turn-on" should be indicated by test set operation. Slowly reduce external power supply voltage from 14 volts to approximately 11 volts. Battery timer and relay should shut off at external voltage of 11.15 volts to 10.8 volts. If not, adjust LOW VOLTAGE CUTOFF pot (R-4214) (Fig. 6-9) so that battery timer and relay shut off between 11.15 and 10.8 volts. For this test, the external power supply must be capable of supplying 10 amps with a maximum ripple voltage of 0.2 volts P-P. Output impedance of the power supply should be quite low to prevent external power supply voltage instability as the input voltage is reduced and the test set's duty cycle regulator compensates. For example, when the test set's input voltage decreases, the duty cycle regulator will increase the current drain from the external power supply to maintain constant power consumpation. This will cause some external power

supplies to become unstable. The start-up surge current of the duty cycle regulator is quite high and may cause some external power supply's current limiting to shut down.

G. Increase external power supply voltage to 14 volts. Turn on the BATT OVEN switch. Observe that oven light comes on. Slowly reduce external power supply voltage toward 11 volts. Oven light should go out between 11.15 and 10.8 volts. If not, adjust OVEN LOW VOLTAGE CUTOFF pot (R-4233) (Fig. 6-9) so that oven light goes out between 11.15 and 10.8 volts. Disconnect external power supply install duty cycle regulator and cover, install battery (or regulator) fuse, install battery and cover, and reconnect ac line cord.

6.8.2 Power Supply and Regulator Board

A. With the set operating on line voltage, measure the +11 volt supply at pin 5 of J17, the Regulator and Power Supply Board connector (see Fig. 6-1-2) (see Fig. 6-7 for connector pin layout). Voltage should be between 10.93 to 11.07 volts. If not, adjust 11V ADJUSTMENT (R-4224) (Fig. 6-9) for +11 volts (± 0.07V).

B. Measure -35 volt supply at the Regulator and Power Supply Board connector pin 11 (J-17). Voltage should be between -34.5V and -35.5V.

C. Measure -12 volt supply at the Regulator and Power Supply Board connector pin 15 (J-17). Voltage should be between -10.5V and -13V.

SECTION VII

PARTS LIST

7.1 CONTENTS

		Page
7.2	Front Panel Assy.....	7-2
	•7 digit Freq. Select Sw. Assy.	
	•Attenuator Assy.	
	•Wire Harness Assy.	
7.3	Upper Floor Assy.....	7-9
	•Het Amp ÷ 2 Prescaler Assy.	
	•Clock Divider Assy.	
	•10 MHz Oven Oscillator Assy.	
	•10 MHz Oven Oscillator P.C. Bd. Assy.	
	•Tune Summation Block Assy.	
	•Dual Buffer Amp. Assy.	
	•V.C.O.	
	•1200-2200 MHz Oscillator Assy.	
	•AGC P.C. Bd. Assy.	
7.4	Rear Panel Assy.....	7-16
	•Duty Cycle Reg. & Bat. Charger Assy.	
7.5	Lower Floor Assy.....	7-20
	•120 MHz Receiver Assy.	
	•100 MHz Amp. 108 Mixer Assy.	
	•FM/AM Generator Assy.	
7.6	Mother Board Assy.....	7-24
	•250 kHz Audio Board Assy.	
	•79-80 MHz Phase Lock Loop P.C. Bd. Assy.	
	•High Freq. Ø Lock Loop P.C. Bd. Assy.	
	•V.C.O. Tuner P.C. Bd. Assy.	
	•Reg. & P.S. P.C. Bd. Assy.	
	•1200 MHz Amp. Assy.	
	•1080 MHz Mult./Amp Assy.	
	•Static Discharge Protector Assy.	
7.7	Hex Block Rail Assy.....	7-35
	•Power Monitor Assy.	
	•1200 MHz Filter Diode, Sw. Assy.	
	•108 MHz Bandpass Filter Assy.	
	•High Frequency Mult. Mixer Block Assy.	
7.8	Assemblies on Upper Right Rail.....	7-37
	•100 MHz Filter Assy.	
	•1st Mixer Assy.	
	•2nd Mixer Assy.	
7.9	Oscilloscope Assy.....	7-39
	•Scope Inverter Bd. Assy.	
	•Scope Main Bd. Assy.	
7.10	Coaxial Cables.....	7-43
7.11	Case Assy.....	7-46

7.2 Front Panel Assy 1-23-0578

Dwg. 4-23-0474 Ref. Symbol	Part No.	IFR Stock No.	Description	Qty Per Assy
		1-23-0578	Front Panel Assy.	REF.
		3-23-0005-1	. Front Panel Structure	1
		1-23-0344	. Mounting Structure	1
		1-23-0258	. Frame Support Members	6
		3-23-0589	. Front Panel Overlay	1
I1-15	BEP		. Lamp Base, Shelly	5
I1-I5	901-531		. Lamp, Ericson Centron	5
I1	GBP		. Lens, Green Shelly (ANTENNA INPUT LEVEL)	1
I4	ABP		. Lens, Amber Shelly (BATT OVEN)	1
I2, I3, I5	RBP		. Lens, Red Shelly (Ø LOCK & PWR ON)	3
J-104	12A		. Jack, ¼" phone Switchcraft (EXT. SPKR)	1
J-106	12B		. Jack, ¼" phone Switchcraft (EXT MOD)	1
J-107	UG1094/U		. Connector, BNC Amphenol (INT, MOD)	1
J-105	UG1094/U		. Connector, BNC Amphenol (DEMOD)	1
R-1	RVGLAYSA254A		. Potentiometer, Clarostat (ZERO RCVR)	1
R-2	CM40780	1-76-0168	. Potentiometer, Clarostat (10 MHz CAL)	1

Dwg. 4-23-0474 Ref. Symbol	Part No.	IFR Stock No.	Description	Qty Per Assy
R-3	382-N-10K-Z	1-76-0178	. Potentiometer, Clarostat (VOL) (pot., modified)	1
R-4, S-10	381-NS-10K-S	1-76-0180	. Potentiometer, Clarostat (BFO) (pot., w/switch, modified)	1
R-5, S-12	381-NS-10K-Z	1-76-0171	. Potentiometer, Clarostat (INT MOD) (pot., w/switch, modified)	2
R-6, S-8	381-NS-10K-Z	1-76-0171	. Potentiometer, Clarostat (SQUELCH) (pot., w/switch, modified)	2
S-1	BP6040	1-16-0181	. Switch, Centralab (DEV/PWR) (rotary switch, modified)	1
S-2	51CD30-01-1-ATN	1-23-0358	. Switch, Grayhill (kHz) (modified)	1
S-3	CK-7101		. Switch, C & K (INT MOD-RCVR)	1
S-4	CK-7213		. Switch, C & K (AUTO-OFF-ZERO, BATT)	1
S-5	CK7207J1-03		. Switch, C & K (PWR-OFF-BATT)	1
S-6	CK7211		. Switch, C & K (REC WIDE, MID, NARROW)	1
S-7	CK7101		. Switch, C & K (GEN/RCVR)	1
S-9	CK7101		. Switch, C & K (INT MOD-RCVR)	1
S-11	CK7301		. Switch, C & K (AM-FM)	1
S-13	CK7101		. Switch, C & K (+40dB µV x 100 - NORM)	1
M-1		2-23-0003	. Meter Jewell 0-500µA (DEV/PWR)	1
	2-0871172-001		. . Jewell Bezell & Hardware kit	2

Dwg. 4-23-0474 Ref. Symbol	Part No.	IFR Stock No.	Description	Qty Per Assy
M-2		2-23-0002	. Meter, Jewell 500-0-500μA (FREQ. ERROR)	1
		1-09-0219-2	. Knob for kHz and DEV/ PWR controls	2
		1-09-0219-1	. Knob, for Intensity, Focus, Horiz, & Vert position, INT MOD, BFO, VOL, ZERO RCVR SWEEP CAL & V/DIV CAL controls.	10
		1-09-0220	. Knob for SWEEP & EXT V/DIV controls	2
		2-23-0163	. Frame Support Member	1
		2-23-0164	. Frame Support Member	1
		2-23-0165	. Frame Support Member	1
		2-23-0166	. Frame Support Member	1
		2-23-0167	. Frame Support Member	1
		1-23-0188	. Tone Generator Assy.	1
		1-23-0433	. 7 Digit Freq. Select Switch Assy.	1
		1-23-0534	. Attenuator Assy.	1
		1-23-0580	. Wire Harness Assy.	1

Ref. Symbol	Part No.	IFR Stock No.	Description	Qty Per Assy
Dwg. Ref. 3-23-0021		1-23-0188	Tone Generator Assy.	REF
		1-23-0018	. Frequency Switch Assy.	1
	177606MN		. . Switch Section, EECO/ Equiv.	5
	76 SM5		. . EECO/Equiv. Assy. kit	1
	M7PLRN		. . Male Connector Winchester/Equiv. (7) pin	1
		1-23-0292	. . . Connector Mtg. Brkt.	1
		1-23-0046	. . Tone Generator Mother Bd.	1
		1-23-0190	. . Tone Generator Bd #1 Assy.	1
		1-23-0048	. . . Tone Gen. P.C. Bd. #1	1
X3 thru X8	SN74LS190N		. . . Logic TI/Equiv.	6
X2	SN7430N		. . . Logic TI/Equiv.	1
X9	SN7473N		. . . Logic TI/Equiv.	1
		1-23-0191	. . Tone Generator Bd. #2 Assy.	1
		1-23-0050	. . . Tone Gen. P.C. Bd #2	1
X11 & X12	SN7490N		. . . Logic TI/Equiv.	2
X10	SN7400N		. . . Logic TI/Equiv.	1
X1	MC4023P		. . . Logic MOTOROLA/ Equiv.	1
Q1 & Q4	2N2222		. . . Transistor SOLID STATE/Equiv.	2
Q3	2N3251		. . . Transistor SOLID STATE/Equiv.	1

Ref. Symbol	Part No.	IFR Stock No.	Description	Qty Per Assy
3-23-0021		1-23-0188	Tone Generator Assy. (Cont'd)	REF
Q2	2N4223		. . . Transistor SOLID STATE/Equiv.	1
CR1 & 2	FD333		. . . Diode FAIRCHILD/ Equiv	2
R-4	62-2-1-501		. . . Trim Pot. SPECTROL/ Equiv.	1
R-15	62-2-1-502		. . . Trim Pot. SPECTROL/ Equiv.	1
R8	62-2-1-203		. . . Trim Pot. SPECTROL/ Equiv.	1
		1-23-0192	. . Tone Generator Bd #3 Assy.	1
		1-23-0052	. . . Tone Gen. P.C. Bd. #3	1
X13	RC4558P		. . . IC TI/Equiv.	1
Q7 & 8	2N2222		. . . Transistor SOLID STATE/Equiv.	2
Q5	2N3251		. . . Transistor SOLID STATE/Equiv.	1
Q6	40673		. . . Transistor RCA/ Equiv.	1
CR3	1N823		. . . Zener Diode, DICKSON/Equiv.	1
CR4 thru 7	1N4148		. . . Diode, DICKSON/ Equiv.	4
R21, 26 & 30	62-1-1-202		. . . Trim pot., SPECTROL/ Equiv.	3
RY17	W107-DIP-1		. . . Relay, MAGNECRAFT/ Equiv.	1

Ref. Symbol	Part No.	IFR Stock No.	Description	Qty Per Assy
		1-23-0433	Frequency Select Switch (7) digit Assy.	REF
	197606MN		. BCD Switch Section, EECO/Equiv.	7
		1-23-0434	. Mother Board	1
	C931602		. IC Socket, TI/Equiv.	2
	E76SM		. End Piece, EECO/Equiv.	2
		1-23-0510	. Rod	2
		1-23-0534	Attenuator Assy	REF
		1-76-0159	. Attenuator, Modified CA 1000/50	1
		2-23-0027	. . Dial Index Ring	1
		2-23-0532	. . µvolt Dial	1
		2-23-0533	. . -dBm Dial	1
		1-23-0476	. . Attenuator Dial Stop	1
		2-23-0477	. . Knob	1
Dwg. Ref 4-23-0474		1-23-0580	Wire Harness Assy.	REF
P2 & P3	205210-1		. Male Connector (37) Pos. AMP/Equiv.	2
	205310-2		. .Crimp Pin, Male AMP/ Equiv.	44
	205202-4		. .Crimp Pin, Male AMP/ Equiv.	39
P-5	205206-1		. Male Connector (15) Pos. AMP/Equiv.	1
J-4	205205-1		. Female Connector (15) Pos. AMP/Equiv	1
	205311-3		. . Female Crimp Socket AMP/Equiv.	5
	205201-5		. . Female Crimp Socket AMP/Equiv.	3

Ref. Symbol	Part No.	IFR Stock No.	Description	Qty Per Assy
Dwg. Reg. 4-23-0474		1-23-0580	Wire Harness Assy.	REF
	205980-1		. . Screw Retaining Kit AMP/Equiv.	4
J-8	M7SLRN		. Connector (7) Pos. Winchester/Equiv.	1
J-11	M5SLSH19C		. Connector (5) Pos. Winchester/Equiv.	1
J-8 & J-10	M7SLSH19C		. Connector (7) Pos. Winchester/Equiv.	2
J-7 & J-9	M9SLSH19C		. Connector (9) Pos. Winchester/Equiv.	2
	1N4148		. Diode (Mounted on S-4)	1

7.3 Upper Floor Assy. 1-23-0216

Ref. Symbol	Part No.	IFR Stock No.	Description	Qty Per Assy
		1-23-0216	Upper Floor Assy.	REF
		3-23-0169	. Upper Floor Mtg. Plate	1
		1-23-0170	. . Hinge	2
		1-23-0171	. . Hinge Rod	1
		1-23-0225	. . Het. Amp. ÷ 2 Prescaler Assy.	1
		1-23-0217	. . Clock Divider Assy.	1
		1-23-0218	. . 10 MHz Oven Oscillator Assy.	1
		1-23-0538	. . Tune Summation Block Assy. (Effective S/N 485 thru 537)	1
		1-23-0566	. . Dual Buffer Amp. Assy. (Effective S/N 485 thru 537)	1
	SSV-0298		. . V.C.O. 1200-2200 MHz SOLID STATE (Effective S/N 485 thru 537)	1
		1-23-0560	. . 1200-2200 MHz Osc. Assy. (Effective S/N 440 thru 484 & 538 and on)	1
		3-23-0686	. . AGC System PC Bd. Assy. (Effective S/N 813 & S/N 882 & on).	1
Dwg. Ref. 3-23-0065		1-23-0225	Het. Amp. ÷ 2 Prescaler Assy. (Eff: Thru S/N 1169)	REF
		2-23-0148-1	. Het. Amp. ÷ 2 Prescaler P.C. Bd. Enclosure Base	1
		2-23-0148-2	. Het. Amp. ÷ 2 Prescaler P.C. Bd. Enclosure Cover	1

Ref. Symbol	Part No.	IFR Stock No.	Description	Qty Per Assy
Dwg. Ref 3-23-0065		2-23-0321	. Het. Amp ÷ 2 Pre-scaler P.C. Bd. Assy.	1
X6501	MC1692L		. . IC, MOTOROLA/Equiv.	2
X6502	MC1616L		. . Logic, MOTOROLA/ Equiv.	1
Q6501 thru 6506	2N2857		. . Transistor, RCA only	6
Dwg. Ref. 3-23-0685		3-23-0683	. Het. Amp. ÷ 2 P.C. Bd. Assy. (Effective S/N 1170)	1
X1	SN72741		. . Op. Amp., T.I./Equiv.	1
X2	MC1670		. . IC, MOTOROLA/Equiv.	1
Q1, 2 & 3	MRF911		. . Transistor, MOTOROLA/ Equiv.	3
Q4	2N2222		. . Transistor, MOTOROLA/ Equiv.	1
Dwg. Ref. 3-23-0062		1-23-0217	Clock Divider Assy.	REF
		2-23-0116-1	. Clock Divider Enclosure Base	1
		2-23-0116-2	. Clock Divider Enclosure Cover	1
		1-23-0093	. Clock Divider P.C. Bd. Assy.	1
J-11	M5PLRN		. . Connector, (5) pin Male, WINCHESTER/ Equiv.	1
X6201 thru 6206	SN7490N		. . Logic, T.I./Equiv.	6
Q6201	2N3646		. . Transistor, GE/Equiv.	1

Ref. Symbol	Part No.	IFR Stock No.	Description	Qty Per Assy
Dwg. Ref. 3-23-0062		1-23-0217	Clock Divider Assy. (cont'd)	REF
	5156-0000-09		. . Coax Connector, AMERICON	2
Dwg. Ref. 3-23-0007		1-23-0218	10 MHz Oven Oscillator Assy.	REF
		3-23-0108-1	. 10 MHz Oven Osc. Enclosure	1
	5156-0000-09		. . Connector, AMERICON	4
	M9PLRN		. . Connector, (9) Position, WINCHESTER	1
	1N4004		. . Diode, DICKSON/Equiv.	3
		1-23-0272	. 10 MHz Osc. Oven Control P.C. Bd. Assy.	1
		1-23-0020	. . 10 MHz Osc. Oven Control P.C. Bd.	1
X703A thru E	SN7404N		. . IC, TI/Equiv.	1
Q704	SJE1462		. . Transistor, MOTOROLA/ Equiv.	1
X701 & 702	5H72741L		. . IC, TI/Equiv.	2
Q706	SJE1461		. . Transistor, MOTOROLA/ Equiv.	1
Q705	66382		. . Transistor, RCA/Equiv.	1
D702	1N823		. . Zener Diode, MOTOROLA/ Equiv.	1
D704 & D705	1N5231B		. . Zener Diode, DICKSON/ Equiv.	2
D703	1N4148		. . Diode, DICKSON/Equiv.	1

Ref. Symbol	Part No.	IFR Stock No.	Description	Qty Per Assy
Dwg. Ref 3-23-0007		1-23-0218	10 MHz Oven Oscillator Assy. (cont'd)	REF
C-711	DV11PS35D		. . Trimmer Cap., JFD/ Equiv.	1
R-737	62-1-1-102		. . Trim Pot., SPECTROL/ Equiv.	1
R-722	62-1-1-202		. . Trim Pot., SPECTROL/ Equiv.	1
Dwg. Ref. 3-23-0007		1-23-0221	. 10 MHZ Oven Osc. P.C. Bd. Assy.	REF
		1-23-0006	. . 10 MHz Oven Osc. P.C. Bd.	1
R-711	#34 AW		. . Bare Nickel Chromium wire wrapped around Osc. Housing (60 ohms).	A/R
C-701	NVC-9GW		. . Piston Trimmer Cap, J.F.D.	1
Y-701	3-76-0063-60		. . Crystal, 10 MHz McCoy	1
Q703	2N3905		. . Transistor, NATIONAL/ Equiv.	1
Q701 & 702	66382		. . Transistor, RCA/Equiv.	2
D701	PCO600D		. . Diode, PARAMETRICS/ Equiv.	1
R-715	JA41J1		. . Thermistor, FENWAL/ Equiv.	1
Dwg. Ref. 2-23-0142		1-23-0538	. Tune Summation Attenuator Assy, (Eff: S/N 270 thru 537).	REF
		2-23-0536	. . Base Plate	1

Ref. Symbol	Part No.	IFR Stock No.	Description	Qty Per Assy
Dwg. Ref. 2-23-0142		1-23-0538	. Tune Summation Attenuator Assy, (cont'd)	REF
	51-045-0000		. . Connector, Male SEALECTRO/Equiv.	2
	2051-1201		. . Connector, Male AMERICON/Equiv.	1
R-14206	62-1-1-503		. . Trim Pot., SPECTROL/Equiv.	1
Dwg. Ref. 2-23-0569		1-23-0566	. Dual Buffer Amp. Assy. (Effective S/N 485 thru 537 and 399 thru 537)	REF
		2-23-0567	. . Housing, Dual Buffer Amp.	1
		1-76-0272	. . Connector, Modified AMERICON/Equiv.	1
	859555-1		. . Feedthru Filter, AMP/Equiv.	1
		1-23-0565	. . Dual Buffer P.C. Bd. Assy.	1
		1-23-0564	. . Dual Buffer P.C. Bd.	1
	5156-0000-09		. . . Bulkhead Connector, AMERICON/Equiv.	2
Q1 thru Q4	MRF-911		. . . Transistor, MOTOROLA/Equiv.	4
	SSV-0298		. V.C.O. 1200-2200 MHz, SOLID STATE/Equiv (Eff: S/N 485 thru 537)	1
Dwg. Ref. 3-23-0558		1-23-0560	. 1200-2200 MHz Oscillator Assy. (Eff: S/N 440 thru 484 & 538 and on). This assy. is combination of Tune Summation, Oscillator and Dual Buffer circuits.	REF

Ref. Symbol	Part No.	IFR Stock No.	Description	Qty Per Assy
Dwg. Ref. 3-23-0558		1-23-0560	. 1200-2200 MHz Oscillator Assy. (Cont'd)	REF
	17-0219-000		. . Connector, AEP/Equiv.	2
L1 & L2	4514		. . Coil, J.W. MILLER/ Equiv.	2
		1-23-0559	. . 1200-2200 MHz Osc. P.C. Bd. Assy. (also contains Tune Sum. & Dual Buffer Circuitry)	1
		1-23-0556	. . . 1200-2200 MHz Osc. P.C. Bd.	1
Q1	2N2222		. . . Transistor, MOTOROLA/Equiv.	1
Q2	CD1857		. . . Transistor, CTC/ Equiv.	1
Q3 thru 6	MRF911		. . . Transistor, MOTOROLA	6
CR1 & 2	MA41502		. . . Diode MICROWAVE ASSOCIATES/Equiv.	2
R-2	62-1-1-503		. . . Trim Pot., SPECTROL/ Equiv.	1
Dwg. Ref. 2-23-0690		2-23-0686	. AGC System PC Bd. Assy.	REF
		1-23-0682	. . AGC System PC Bd.	1
X1, 3 4 & 6	CA3130		. . IC, RCA/Equiv.	4
X5	CD4066		. . IC, RCA/Equiv.	1
X2	CD4029		. . IC, RCA/Equiv.	1
Q1	2N2222		. . Transistor, MOTOROLA/ Equiv.	1
Q2	3N128		. . Transistor, MOTOROLA/ Equiv.	1

Ref. Symbol	Part No.	IFR Stock No.	Description	Qty Per Assy
Dwg. Ref. 2-23-0690		2-23-0686	. AGC System PC Bd. Assy. (cont'd)	REF
CR1 & 2	1N4148		. . Transistor, DICKSON/ Equiv.	1
SW1 thru SW4	435166-2		. . Switch, Amp/Equiv.	1

7.4 Rear Panel Assy. 1-23-0380

Dwg. Ref 3-25-0403 Ref. Symbol	Part No.	IFR Stock No.	Description	Qty Per Assy
		1-23-0380	Rear Panel	REF
T18001	NT-2310	2-76-0182	. Transformer, National	1
		1-23-0359	. Transformer Mounting Block	1
		1-23-0381	. Support Foot	1
		1-23-0382	. Support Foot	3
		2-23-0226	. Support Rail	2
		2-23-0153	. Support Rail	2
	HKP		. Fuse Holder BUSS	3
F18001	MDL-1.25		. Fuse, 1.25A BUSS, SLO-BLO	1
F18002			. Fuse, 7½A BUSS	1
F18003			. Fuse, 7½A BUSS	1
BR18001	PK-10		. Rectifier, ELECTRONIC DEVICES	2
	P2406-AB		. CINCH male AC plug	1
		2-23-0136	. . AC Plug Housing	1
CB18001	TS-35A		. Thermostat, HAMLIN	1
		3-23-0118	. Internal Battery Cover	1
TB 2,3	014-3000		. . Telfon Terminal SELECTRO	2
TB-1	4-170		. . CINCH Terminal Block	1
CR18002	1N4736A		. . Zener Diode	1
CR18001	NS-2001		. . Diode, SOLITRON	1
J-5,12	205205-1		. AMP 15 Position Female Connector	2

Ref. Symbol	Part No.	IFR Stock No.	Description	Qty Per Assy
Dwg. Ref. 3-23-0403			Rear Panel Assy. (cont'd)	REF
	205201-5		. . Female Crimp Pins	30
		1-76-0246	. Fixed Attenuator, WEINSCHEL	1
FAN 18001	19A2649	1-76-0279	. Fan, TRW, Modified	1
		1-00-0154	. . Fan Housing	1
		1-23-0456	. . Vibration Damper	1
		1-76-0245	. Battery Modified GATES	1
		3-23-0075	. Battery Cover	1
		1-23-0384	. Duty Cycle Regulator & Battery Charger Assy.	1
Dwg. Ref. 3-23-0051		1-23-0384	Duty Cycle Regulator Assy.	REF
		2-23-0377	. Side Cover	1
		3-23-0376	. Rear Cover	1
		2-23-0375	. . Heat Sink Plate	1
	014-2021-000-689		. . SEALECTRO Telfon Terminal	4
CR-5103 thru 5106 CR-5118 & 5119	NS-2001		. . SOLITRON Diode	6
Q5102 & Q5112	2N5879		. . MOTOROLA Transistor	2
Q5110	2N6109		. . RCA Transistor	1
Q5101	2N5195		. . Motorola Transistor	1
		1-23-0090	. Duty Cycle Regulator Assy.	1
		2-23-0374	. . Duty Cycle Regulator P.C. Bd. Mtg. Brkt.	1

Ref. Symbol	Part No.	IFR Stock No.	Description	Qty Per Assy
Dwg. Ref. 3-23-0051		1-23-0384	Duty Cycle Regulator Assy. (cont'd)	REF
		2-23-0373	. . Duty Cycle Regulator P.C. Bd. Mtg. Brkt.	1
	.125F401 S 2-14		. . ANSLEY FLEX Strip	A/R
		2-23-0378	. . Duty Cycle Regulator Base Plate	1
	51-708-001		. . Feed thru Filter SPECTRUM Controls	6
P-12	205206-1		. . AMP (15) Position Connector	1
	205202-4		. . . AMP Female Crimp	15
		2-23-0098	. . Duty Cycle Regulator P.C. Bd. Assy.	1
	350-2188-09-07		. . . Threaded standoff CAMBION	4
X5101	MC1709CG		. . . MOTOROLA/Equiv. I.C.	1
X5102	SN72741L		. . . TEXAS INST/Equiv. I.C.	1
Q5107 & Q5108	2N2405		. . . MOTOROLA/Equiv. Transistor	2
Q5103 & Q5104	2N3646		. . . GE/Equiv. Transistor	2
Q5106	2N3905		. . . NATIONAL/Equiv. Transistor	1
Q5105, 5109 & 5111	2N3251		. . . GE/Equiv. Transistor (Metal)	3
CR5117	1N4002		. . . ITT/Equiv. Diode	1

Ref. Symbol	Part No.	IFR Stock No.	Description	Qty Per Assy
Dwg. Ref. 3-23-0051		1-23-0384	Duty Cycle Regulator Assy. (cont'd)	REF
CR5101 & CR5102 & CR5110 thru CR5115	1N4148		. . . DICKSON/Equiv. Diode	8
CR5108 5109 & CR5116	1n5234		. . . MOTOROLA/Equiv. Zener Diode	3
R5116	62-2-1-102		. . . SPECTROL/Equiv. Trim Pot.	1
R5123	62-2-1-502		. . . SPECTROL/Equiv. Trim Pot	1
		1-23-0349	. . Toroid Mounting P.C. Bd. Assy.	1
		1-23-0340	. . . Toroid Mounting P.C. Bd.	1
		1-23-0296	. . . XFMR Mounting Hub	1
T5101		1-76-0155	. . . Inverter Transformer	1
		1-23-0217-2	. . . Toroid Mounting Hub	4
L5101 thru 5104		1-76-0162	. . . Toroid	4
CR5107	NS2002		. . . SOLITRON/Equiv. Diode.	1

7.5 Lower Floor Assy. 1-23-0492

Ref. Symbol	Part No.	IFR Stock No.	Description	Qty Per Assy
		1-23-0492	Lower Floor Assy.	REF
		3-23-0102	. Under Scope Mtg. Plate	1
		1-00-0169-1	. Hinge Assy.	2
		1-23-0483	. 120 MHz Receiver Assy.	1
		3-23-0484-1	. . 120 MHz Receiver P.C. Bd. Enclosure Base	1
		3-23-0484-2	. . 120 MHz Receiver P.C. Bd. Enclosure Cover	1
		1-23-0219	. 100 MHz Amp. 108 Mixer Assy.	1
		3-23-0151-1	. . 100 MHz Amp. 108 Mixer P.C. Bd. Enclosure	1
		3-23-0151-2	. . 100 MHz Amp. 108 Mixer P.C. Bd. Enclosure Cover	1
		1-23-0495	. FM/AM Generator Assy.	1
		3-23-0137-1	. . FM/AM Gen. P.C. Bd. Enclosure Base	1
		3-23-0137-3	. . FM/AM Gen P.C. Bd. Enclosure cover	1
Dwg. Ref 3-23-0481		1-23-0483	120 MHz Receiver Assy.	REF
		1-23-0482	. 120 MHz Rcvr P.C. Bd. Assy	1
		1-23-0481	. . 120 MHz Rcvr P.C. Bd.	5

Ref. Symbol	Part No.	IFR Stock No.	Description	Qty Per Assy
Dwg. Ref 3-23-0481		1-23-0483	120 MHz Receiver Assy.	REF
Q6701, 6702, 6703, 6708 & 6709	40673		. . Transistor, RCA/ Equiv.	5
Q6704, 6705, 6706 & 6710	2N2222		. . Transistor, MOTO-ROLA/Equiv.	4
Q6707	2N3905		. . Transistor, NATIONAL/ Equiv.	1
Y6701	3-76-0063-62		. . Crystal, K-W/Equiv.	1
Y6702	3-76-0063-19		. . Crystal, K-W/Equiv.	1
CR6703 thru 6707	MA47047		. . Diode, MICROWAVE ASSOC./Equiv.	5
CR6708	1N4148		. . Diode, DICKSON/ Equiv.	1
R6718 & 6742	2H202		. . Thermistor, MIDWEST COMPONENTS/Equiv.	2
Dwg. Ref. 3-23-0061		1-23-0219	100 MHz Amp. 108 Mixer Assy.	REF
		1-23-0095	. 100 MHz Amp. 108 Mixer P.C. Bd. Assy.	1
		1-23-0064	. . 100 MHz Amp. 108 Mixer P.C. Bd.	1
Q6101, 6102, 6105, 6106 & 6107	40673		. . . Transistor, RCA	5

Ref. Symbol	Part No.	IFR. Stock No.	Description	Qty Per Assy
Dwg. Ref 3-23-0061		1-23-0219	100 MHz Amp. 108 Mixer Assy. (cont'd)	REF
Q6103, 6104 & 6108	66382		. . . Transistor, RCA/ Equiv.	3
Dwg. Ref 3-23-0497		1-23-0495	FM/AM Generator Assy.	REF
		1-23-0496	. FM/AM Generator P.C. Bd. Assy.	1
		2-23-0264	. . FM/AM Generator P.C. Bd. Assy.	1
Y26201		3-76-0063-18	. . . Crystal, 10MHz	1
Y26202		3-76-0063-77	. . . Crystal, 54.78 MHz	1
CR26201 & 26212	PC0605D		. . . Diode, PARAMETRICS/ Equiv.	2
CR26204 & 26205	MA47047		. . . Diode, MICROWAVE ASSOC./Equiv.	2
CR26206, 26207, 26209,& 26210 26211	1N4148		. . . Diode, DICKSON/ Equiv.	5
CR26208 & 26213	5082-2800		. . . Diode, HEWLETT-PACKARD/Equiv.	2
R26218 & 26219	62-1-1-201		. . . Trim Pot., SPEC-TROL	2
X26201	LM741CH		. . . IC, NATIONAL	1
X26202	SN74S-112H		. . . IC, TI/Equiv.	1
X26203 26204 & 26205	SN7490N		. . . IC, TI/Equiv.	3

Ref. Symbol	Part No.	IFR Stock No.	Description	Qty Per Assy
Dwg. Ref. 3-23-0497		1-23-0495	FM/AM Generator Assy. (cont'd)	REF
X26206	SN7473N		. . . IC, TI/Equiv.	1
Q26201 26210 & 26211	2N2222		. . . Transistor MOTOROLA/Equiv.	3
Q26202 & 26203	2N3903		. . . Transistor, NATIONAL/Equiv.	2
Q26204	2N3905		. . . Transistor, NATIONAL/Equiv.	1
Q26205 & 26206	40673		. . . Transistor, NATIONAL/Equiv.	2
Q26207 & 26209	66382		. . . Transistor, RCA/ Equiv.	2
Q26208	2N4416		. . . Transistor, NATIONAL/Equiv.	1
Q26212	2N3251		. . . Transistor, NATIONAL/Equiv.	1

7.6 Mother Board Assy. 1-23-0581

Ref. Symbol	Part No.	IFR Stock No.	Description	Qty Per Assy
Dwg. Ref. 4-23-0474		1-23-0581	Mother Board Assy.	REF
		3-23-0470	. Mother Board	1
	67762-1		. Card Guide, AMP	3
J-13	50-30A-30		. Connector, CINCH	2
		1-23-0573	. . 250 kHz IF Monitor, Audio P.C. Bd. Assy.	1
J-14	50-22A-20		. Connector, CINCH	1
		2-23-0437-1	. . Shield, Connector	1
		2-23-0473-2	. . Shield, Connector	1
		1-23-0424	. . 79-80 MHz Phase Lock Loop P.C. Bd. Assy.	1
		3-23-0442	. . 79-80 MHz Phase Lock Loop P.C. Bd. Enclosure	1
J-15	50-15A-20		. Connector, CINCH	2
		2-23-0472-1	. . Shield, Connector	1
		2-23-0472-2	. . Shield, Connector	1
		1-23-0493	. . High Frequency Phase Lock Loop P.C. Bd. Assy.	1
		3-23-0485	. . High Frequency Phase Lock Loop P.C. Bd. Enclosure	1

Ref. Symbol	Part No.	IFR. Stock No.	Description	Qty Per Assy
J-16	50-15A-20		. Connector, CINCH	2
		1-23-0423	. . V.C.O. Tuner P.C. Bd. Assy.	1
		2-76-0001-63	. . Standoff	1
		1-23-0426	. . . V.C.O. Tuner P.C. Bd. Retainer	1
J-17	50-30A-30		. Connector, CINCH	2
		1-23-0091	. . Regulator and Power Supply P.C. Bd. Assy.	1
		1-23-0554	. 1200 MHz Amp. Assy.	1
		1-23-0516	. 1080 MHz Mult./Amp. Assy.	1
		2-23-0274	. . 1080 MHz Mult./Amp Mtg. Brkt.	1
		1-23-0602	. Static Discharge Protector Assy. (Effective S/N 575 & on)	1
		1-23-0468	. Static Discharge Protector Assy. (Effective S/N 574)	1
J-3	205713-1		. Connector, Female AMP	1
J-2	205209-1		. Connector, Female AMP	1
P-6	205204-1		. Connector, Male AMP	1
	205980-1		. . Screw Retaining Kit AMP	1
		2-23-0542	. Frequency Select Flex. Strip (Y connector)	1
	3416		. . Plug, 3M DIP Pin	1

Ref. Symbol	Part No.	IFR Stock No.	Description	Qty Per Assy
		2-23-0543	. Frequency Select Flex Strip (X connector)	1
	3416		. . Plug, 3M DIP Pin	1
Q4215	SJE1461		. Transistor, MOTOROLA/ Equiv.	1
	MK77-1-2		. . Transistor Mtg. Kit, MOTOROLA/Equiv.	1
Q4208	SJE1462		. Transistor, MOTOROLA/ Equiv.	1
	MK77-1-2		. . Transistor Mtg. Kit, MOTOROLA	1
Dwg. Ref. 4-23-0605		1-23-0573	. 250 kHz IF Monitor, Audio P.C. Bd. Assy.	REF
		2-23-0572	. . 250 kHz IF Monitor, Audio P.C. Bd.	1
X1, X2, X7, X8	CA3130T		. . . I.C., RCA/Equiv.	4
X3, X4, X9	MC1458		. . . Dual Op. Amp. MOTOROLA/Equiv.	3
X5, X6	CD4066		. . . Quad Switch, RCA/ Equiv.	2
X10	MC1709CG		. . . I.C. MOTOROLA/ Equiv.	1
X11	LM380N		. . . Audio Amp., NATIONAL/Equiv.	1
X12	LM741CH		. . . I.C., NATIONAL/ Equiv.	1
Q1	40673		. . . Transistor, RCA/ Equiv.	1
Q2, 8 9, 10, 11, 14 & 15	2N2222		. . . Transistor, MOTO-ROLA/Equiv.	7

Ref. Symbol	Part No.	IFR Stock No.	Description	Qty Per Assy
Dwg. Ref. 4-23-0605		1-23-0573	. 250 kHz IF Monitor, Audio P.C. Bd. Assy. (cont'd)	REF
Q3	2N3905		. . . Transistor, NATIONAL/Equiv.	1
Q4	2N3903		. . . Transistor, NATIONAL/Equiv.	1
Q5, 6, 7, 12, & 13	2N3251		. . . Transistor, NATIONAL/Equiv.	5
Q16	2N3646		. . . Transistor, GE/Equiv.	1
CR1 thru 7 & CR10 thru 21	1N4148		. . . Diode, DICKSON/Equiv.	18
CR8, 9	1N5231		. . . Zener Diode, DICKSON/Equiv.	2
R27, 42 & 64	62-1-1-102		. . . Trim Pot., SPECTROL/Equiv.	3
R-41	62-1-1-202		. . . Trim Pot., SPECTROL/Equiv.	1
R-39, 44, & 66	62-1-1-502		. . . Trim Pot., SPECTROL/Equiv.	3
R-7, 8, 68, & 80	62-1-1-103		. . . Trim Pot., SPECTROL/Equiv.	4
R-52, 70 & 109	62-1-1-503		. . . Trim Pot., SPECTROL/Equiv.	3
Dwg. Ref. 3-23-0425		1-23-0424	. 79-80 MHz Phase Lock Loop P.C. Bd. Assy.	REF
		1-23-0498	. . 79-80 MHz Phase Lock Loop P.C. Bd.	1
X1 & X8	MC120-13L		. . . IC, MOTOROLA/Equiv.	2

Ref. Symbol	Part No.	IFR Stock No.	Description	Qty Per Assy
Dwg. Ref. 3-23-0425		1-23-0424	. 79-80 MHz Phase Lock Loop P.C. Bd. Assy. (cont'd)	REF
X2	72741L		. . . IC, TI/Equiv.	1
X3 & X4	SN7473N		. . . IC, TI/Equiv.	2
X5	SN7420N		. . . IC, TI/Equiv.	1
X6	SN7402N		. . . IC, TI/Equiv.	1
X7	SN7400N		. . . IC, TI/Equiv.	1
X9, 10 11, 12, 13 & 14	SN74190N		. . . IC, TI/Equiv.	6
Q1, 12 & 13	2N2222		. . . Transistor, SOLID STATE/Equiv.	3
Q3	2N4223		. . . Transistor, NATIONAL/Equiv.	1
Q4 & 5	2N3646		. . . Transistor, FAIRCHILD/Equiv.	2
Q6, 7, 9, 10 & 14	66382		. . . Transistor, FAIRCHILD/Equiv.	5
Q8	2N4416		. . . Transistor, MOTOROLA/Equiv.	1
Q11 & 2	2N3251		. . . Transistor, NATIONAL/Equiv.	2
CR1 & 2	FD333		. . . Diode, FAIRCHILD/ Equiv.	2
CR5	PC0605D		. . . Diode, PARAMETRICS/ Equiv.	1
CR6	5082-2800		. . . Diode, HEWLETT-PACKARD/Equiv.	1
CR7	1N823A		. . . Zener Diode, DICKSON/Equiv.	1

Ref. Symbol	Part No.	IFR Stock No.	Description	Qty Per Assy
Dwg. Ref 3-23-0425		1-23-0424	. 79-80 MHz Phase Lock Loop P.C. Bd. Assy. (cont'd)	REF
CR8	1N4148		. . . Diode, DICKSON/ Equiv.	1
R-32	62-1-1-202		. . . Trim Pot, SPECTROL/ Equiv.	1
Dwg. Ref. 3-23-0396		1-23-0493	. High Freq. Phase Lock Loop P.C. Bd. Assy.	REF
		3-23-0501	. . High Freq. Phase Lock P.C. Bd.	1
X3201 & 3208	SN7473N		. . . IC, TI/Equiv.	2
X3202	MC12013L		. . . IC, MOTOROLA/Equiv.	1
X3203, 3204, & 3205	SN74190N		. . . IC, TI/Equiv.	3
X3206 & X3209	SN7410N		. . . IC, TI/Equiv.	2
X3207	SN7490		. . . IC, TI/Equiv.	1
X3210	SN7420N		. . . IC, TI/Equiv.	1
X3211	SN7400N		. . . IC, TI/Equiv.	1
X3212	SN74121N		. . . IC, TI/Equiv.	1
Q3201, 3204 & 3205	66382		. . . Transistor, RCA/ Equiv.	3
Q3202	2N2405		. . . Transistor, MOTO-ROLA/Equiv.	1
Q3203, 3206, 3207, 3209, 3210, & 3215	2N5251		. . . Transistor, SOLID STATE/Equiv.	6

Ref. Symbol	Part No.	IFR Stock No.	Description	Qty Per Assy
Dwg. Ref. 3-23-0396		1-23-0493	. High Freq. Phase Lock Loop P.C. Bd. Assy.	REF
Q3206 & 3208	2N4223		. . . Transistor, NATIONAL/Equiv.	2
Q3216 & 3211	2N2222		. . . Transistor, SOLID STATE/Equiv.	2
Q3212, 3213 & 3214	2N3646		. . . Transistor, FAIRCHILD/Equiv.	3
CR3201 thru 3206	1N4148		. . . Diode, DICKSON/ Equiv.	6
R3237	62-1-1-202		. . . Trim pot., SPECTROL/ Equiv.	1
Dwg. Ref. 3-23-0038		1-23-0423	. V.C.O. Tuner P.C. Bd. Assy.	REF
		1-23-0394	. . V.C.O. Tuner P.C. Bd.	1
RY3801	W172 DIP -3		. . . Relay, MAGNACRAFT/ Equiv.	1
RY3802 thru 3806	W117 DIP -3		. . . Relay., MAGNACRAFT/ Equiv.	5
X3801	SN74145N		. . . IC, TI/Equiv.	1
Q3801, 3802, & 3804	2N2222		. . . Transistor, MOTOROLA/Equiv.	3
Q3803 & 3805	2N2905		. . . Transistor, FAIRCHILD/Equiv.	2
Q3806	2N2405		. . . Transistor, RCA/ Equiv.	1
Q3807 thru 3811	2N3251		. . . Transistor, (Metal only) SOLID STATE/ Equiv.	5

Ref. Symbol	Part No.	IFR Stock No.	Description	Qty Per Assy
Dwg. Ref. 3-23-0038		1-23-0493	. V.C.O. Tuner P.C. Bd. Assy. (cont'd)	REF
D3801 thru 3806	1N4148		. . . Diode, DICKSON/ Equiv.	6
R3808 & 3825	62-2-1-202		. . . Trim Pot., SPECTROL/Equiv.	2
R3811	62-2-1-504		. . . Trim Pot., SPECTROL/Equiv.	1
R3815 & 3820	62-2-1-102		. . . Trim Pot., SPECTROL/Equiv.	2
R3816, 3821 & 3826	62-2-1-204		. . . Trim Pot., SPECTROL/Equiv.	3
R3830 & 3835	62-2-1-502		. . . Trim Pot., SPECTROL/Equiv.	2
R3831	62-2-1-503		. . . Trim Pot., SPECTROL/Equiv.	1
Dwg. Ref. 3-23-0042		1-23-0091	. Regulator & Power Supply P.C. Bd. Assy.	REF
		2-23-0060	. . Regulator & Power Supply P.C. Bd.	1
X4201	SN72558L		. . . IC, TI/Equiv.	1
X4202, 4203, & 4204	SN72741L		. . . IC, TI/Equiv.	3
Q4201, 4204, 4206, 4207, 4209, 4211, 4220, & 4222	2N3251A or 2N5366		. . . Transistor, MOTOROLA/Equiv.	8

Ref. Symbol	Part No.	IFR Stock No.	Description	Qty Per Assy.
Dwg. Ref. 3-23-0042		1-23-0091	. Regulator & Power Supply P.C. Bd. Assy. (cont'd)	REF
Q4204, 4203, 4212, 4218 & 4219	2N2222		. . . Transistor, MOTOROLA/Equiv.	5
Q4205	UC-714		. . . Transistor, NATIONAL/Equiv.	1
Q4210	SJE-1462		. . . Transistor, MOTOROLA/Equiv.	2
Q4123	2N2405		. . . Transistor, MOTOROLA/Equiv.	1
Q4214 & 4216	2N3905		. . . Transistor, NATIONAL/Equiv.	2
Q4215	SJE-1461		. . . Transistor, MOTOROLA/Equiv.	1
Q4217, 4221, 4223 & 4224	2N2905		. . . Transistor, RCA/ Equiv.	4
CR4201, 4202, 4203, 4204, 4205, 4207, 4212, 4213, 4214, 4215, & 4217	1N4148		. . . Diode, DICKSON/ Equiv.	11
CR4206	1N823		. . . Diode, DICKSON/ Equiv.	1
CR4208	1N5234B		. . . Diode, DICKSON/ Equiv.	1

Ref. Symbol	Part No.	IFR Stock No.	Description	Qty Per Assy.
Dwg. Ref. 3-23-0042		1-23-0091	. Regulator & Power Supply P.C. Bd. Assy. (cont'd)	REF
CR4209, 4216	HP2800		. . . Diode, DICKSON/ Equiv.	2
CR4211	1N270		. . . Diode, DICKSON/ Equiv.	1
R4214, 4224 & 4233	62-2-1-502		. . . Trim Pot., SPECTROL/ Equiv.	3
R4227 & 4242	62-2-1-103		. . . Trim Pot., SPECTROL/ Equiv.	2
R4241	62-2-1-102		. . . Trim Pot., SPECTROL/ Equiv.	1
R4244	62-2-1-202		. . . Trim Pot., SPECTROL/ Equiv.	1
Dwg. Ref. 2-23-0548		1-23-0544	. 1200 MHz Amplifier Assy.	REF
		2-23-0552	. . Housing, 1200 MHz AMP	1
		2-23-0553	. . Cover, 1200 MHz AMP	1
		1-23-0547	. . 1200 MHz AMP. P.C. Bd.	1
Q4801, 4802 & 4803	MRF911		. . . Transistor, TI/ Equiv.	3
Dwg. Ref. 2-23-0546		1-23-0516	. 1080 MHz Multiplier/ Amplifier Assy.	REF
		2-23-0517	. . Mounting Plate, 1080 MHz Mult/AMP. P.C. Bd.	1
		1-23-0513	. . 1080 MHz Mult/AMP P.C. Bd. Assy.	1
		1-23-0512	. . . 1080 MHz Mult/AMP P.C. Bd.	1

Ref. Symbol	Part No.	IFR Stock No.	Description	Qty Per Assy
Dwg. Ref. 2-23-0546		1-23-0516	. 1080 MHz Multiplier/ Amplifier Assy.	REF
Q4601	66382		. . . Transistor, RCA/ Equiv.	1
Q4602	2N5109		. . . Transistor, MOTO-ROLA/Equiv.	1
CR4601 & 4602	1N4148		. . . Diode, DICKSON/ Equiv.	2
CR4603	HP5082-2800		. . . Diode, HP/Equiv.	1
CR4604	HP5082-0180		. . . Diode, HP/Equiv.	1
or				
CR4604	MA44300		. . . Diode, MA/Equiv.	
C-4610	GYC4004		. . . Trimmer Cap., SPRAGUE-GOODMAN	1
C4612	NVC9GW		. . . Trimmer Cap., JFD/ Equiv.	1
Dwg. Ref. 1-23-0457		1-23-0602	. Static Discharge Protector Assy. (Eff: S/N 575 & on)	REF
		1-23-0600	. . Terminal Plate	1
CR5701 thru 5708	MA47047		. . . Diode, MICROWAVE ASSOC/Equiv.	8
Dwg. Ref. 1-23-0457		1-23-0468	. Static Discharge Protector Assy. (Eff: up thru S/N 574)	REF
		1-23-0466	. . Static Discharge Protector P.C. Bd.	1
CR5701 thru 5708	MA47047		. . . Diodes, MICROWAVE ASSOC/Equiv.	8

7.7 "Hex Block Rail" Assy.

Ref. Symbol	Part No.	IFR Stock No.	Description	Qty Per Assy
		2-23-0290	Mounting Bracket	REF
		1-76-0190	. Relay, Change-over	1
		2-23-0144	. . Mounting Bracket	1
		1-23-0228	. . Power Monitor Assy.	1
		1-23-0297	. 1200 MHz Filter/Diode Sw. Assy.	1
		1-23-0402	. 108 MHz Bandpass Filter Assy.	1
		1-23-0097	. High Freq. Multiplier Mixer Block Assy. (Hex Block)	1
Dwg. Ref 1-23-0111		1-23-0228	Power Monitor Assy.	REF
		2-23-0337	. Power Monitor Block	1
R11101	62D-31250		. . Resistor, PYROFILM/ Equiv.	1
C11101	FA5C-102W		. . Capacitor, ALLEN-BRADLEY/Equiv.	1
CR11101	MS-324		. . Diode, SOLITRON MICROWAVE/Equiv.	1
Dwg. Ref 1-23-0124		1-23-0297	1200 MHz Filter Diode Switch Assy.	REF
		3-23-0287	. 1200 MHz Filter Block	1
C12401	FA5C-102W		. . Capacitor, ALLEN-BRADLEY	1
L12401 thru 12406	1025-08		. . Choke, DELEVAN/ Equiv.	6
C12401 thru 12412	MA47047		. . Diode, MICROWAVE ASSOC./Equiv.	12

Ref. Symbol	Part No.	IFR Stock No.	Description	Qty Per Assy
Dwg. Ref 1-23-0421		1-23-0402	108 MHz Bandpass Filter Assy.	REF
		2-23-0398	. Housing Block	1
C2 thru C5	VC26G		. . Trimmer Capacitor, JFD/Equiv.	4
C1 & C6	DM05-020D		. . NPO Disc Cap.. ARCO/Equiv.	2
Dwg. Ref 3-23-0082		1-23-0097	High Freq. Multi. Mixer (Hex Block) Assy.	REF
		3-23-0068	. Mixer Block	1
CR8203	PR-161		. . Diode, PARAMETRICS/ Equiv.	1
CR8204 thru 8213	MA47047		. . Diode, MICROWAVE ASSOC./Equiv.	10
CR8214	MS324		. . Diode, SOLITRON/Equiv.	1
J-6	205203-1		. . Connector, (9) Pos. AMP/Equiv.	1
	205311-9		. . . Pin, Female AMP/ Equiv.	1
		1-23-0101	. High Freq. Mult. Mixer AMP Bd. Assy.	1
		1-23-0133	. . High Freq. Mult. Mixer AMP P.C. Bd.	1
Q8201 & 8202	2N5109		. . . Transistor, MOTO-ROLA only	2
CR8201 & 8202	1N4148		. . . Diode, SOLID STATE/Equiv.	2
C8207	GYC40004		. . . Vari Ceramic Cap., SPRAGUE-GOODMAN/ Equiv.	1

7.8 Assemblies on Upper Right Rail

Ref. Symbol	Part No.	IFR Stock No.	Description	Qty Per Assy
		1-23-0591	100 MHz Filter Assy.	1
		1-23-0250	1st Mixer Assy.	1
		1-23-0462	2nd Mixer Assy.	1
Dwg. Ref. 2-23-0300		1-23-0591	100 MHz Filter Assy.	REF
		2-23-0592-1	. 100 MHz Filter Housing Base	1
		2-23-0592-2	. 100 MHz Filter Cover	1
		1-23-0303	. 100 MHz Filter P.C. Bd. Assy.	1
		1-23-0301	. . 100 MHz Filter P.C. Bd.	1
Q3001	40673		. . . Transistor, RCA/ Equiv.	1
Dwg. Ref. 1-23-0276		1-23-0250	1st Mixer Assy.	REF
		2-23-0335	. 1st Mixer Block	1
		1-23-0336	. 1st Mixer Block Cover	1
MXR 27601	MD614		. . Mixer, ANZAC/Equiv.	1
CR27601, 27602 & 27605	PSO-83B		. . Diode, PARAMETRICS	3
CR27603	MS324		. . Diode, SOLITRON/Equiv.	1
Dwg. Ref. 2-23-0475		1-23-0462	2nd Mixer Assy.	REF
		2-23-0461	. 2nd Mixer Block Cover	1
		3-23-0460	. 2nd Mixer Block	1

Ref. Symbol	Part No.	IFR Stock No.	Description	Qty Per Assy
Dwg. Ref. 2-23-0475		1-23-0462	2nd Mixer Assy. (cont'd)	REF
CR1 thru CR10	MA47047		. . Diode, MICROWAVE ASSOC./Equiv.	10
CR11	HP2800		. . Diode, HP/Equiv.	1
CR16, 17 & 18	1N4148		. . Diode, DICKSON/ Equiv.	3
	MD-113		. . Mixer, ANZAC/Equiv.	1
		2-23-0529	. 40 dB Booster Block	1
CR12, 13, 14 & 15	MA47047		. . Diode, MICROWAVE ASSOC/Equiv.	4

7.9 Oscilloscope Assy. 1-23-0194

Ref. Symbol	Part No.	IFR Stock No.	Description	Qty Per Assy
Dwg. Ref 3-23-0034		1-23-0194	Oscilloscope Assy. (Effect: Thru S/N 1069)	REF.
		3-23-0195	. Front Plate	1
		1-23-0016	. Graticule	1
	3RP-1		. CRT, RCA/Equiv.	1
		3-23-0105	. Side Plate, Right	1
		3-23-0106	. Side Plate, Left	1
		2-23-0107	. Scope Frame Upper Mounting Plate	1
		1-23-0130	. Scope Inverter Board Assy.	1
		1-23-0076	. Scope Main Board Assy.	1
		2-23-0140	. Frame Rear Cover	1
R3481		1-76-0161	. Potentiometer (HORIZ. CTR) (Modified Clarostat RVGNAYSDO12A)	1
R3443		1-76-0148-1	. Potentiometer (VERT. CTR) (Modified Clarostat RVGNAYSD103A)	1
Dwg. Ref 3-23-0034		1-23-0130	. Scope Inverter Board Assy.	REF
		2-23-0127	. Scope Inverter P.C. Bd.	1
BR3401	VH248		. . Bridge Rectifier, VARO/Equiv.	1
CR3408 & 3409	MR250-5		. . Diode, MOTOROLA/ Equiv.	2

Ref. Symbol	Part No.	IFR Stock No.	Description	Qty Per Assy
Dwg. Ref. 3-23-0034		1-23-0130	Scope Inverter Board Assy.	REF
CR3401 thru 3413	1N4004		. . Diode, MOTOROLA/ Equiv.	4
L3401		2-76-0260	. . Toroid Inductor	1
T3401		2-76-0240	. . Transformer, PRE-CISION WINDING/ Equiv.	1
R3487		1-76-0169	. . Potentiometer (IN-TENSITY)	1
R3485		1-76-0170	. . Potentiometer (FOCUS)	1
Dwg. Ref. 3-23-0034		1-23-0076	Scope Main Board Assy.	REF
		2-23-0299	. Scope Main P.C. Bd.	1
X3401	LM741L		. . IC, NATIONAL/Equiv.	1
X3402	LM709CH		. . IC, TI/Equiv.	1
X3403	CA3100T		. . IC, RCA/Equiv.	1
Q3401	2N2905		. . Transistor, FAIR-CHILD/Equiv.	1
Q3402	2N3956		. . Transistor, dual FET/Equiv.	1
Q3403, 3406 & 3415	2N2222		. . Transistor, SOLID STATE/Equiv. (metal can)	3
Q3404, 3405, 3410, 3414 & 3416	40321		. . Transistor, RCA/ Equiv.	5
Q3407, 3412, 3413	2N3251		. . Transistor, SOLID STATE/Equiv.	3

Ref. Symbol	Part No.	IFR Stock No.	Description	Qty Per Assy
Dwg. Ref. 3-23-0034		1-23-0076	Scope Main Board Assy.	REF
Q3408, 3409	2N3646		. . Transistor, NATIONAL /Equiv.	2
Q3411	2N2405		. . Transistor, RCA/Equiv.	1
CR3401 & 3415	1N5234B		. . Diode, Zener, DICKSON/Equiv.	2
CR3402 thru 3407 & 3416 thru 3419	1N4148		. . Diode, DICKSON/ Equiv.	10
CR3414	1N5231B		. . Diode, Zener, DICKSON/Equiv.	1
RY3401 & 3402	W172DIP-3		. . Relay	2
R3422		1-23-0077	. . Potentiometer (VERT GAIN) control	1
R3463		1-23-0078	. . Potentiometer (HORIZ SWEEP VERN)	1
R3406	62-1-1-202		. . Trim Pot., SPECTROL/ Equiv.	1
R3419	62-2-1-201		. . Trim Pot., SPECTROL/ Equiv.	1
R3422	62-2-1-103		. . Trim Pot., SPECTROL/ Equiv.	1
R3427	62-2-1-503		. . Trim Pot., SPECTROL/ Equiv.	1
R3463	62-2-1-203		. . Trim Pot., SPECTROL/ Equiv.	1
R3472	62-2-1-102		. . Trim Pot., SPECTROL/ Equiv.	1
R3476	62-1-1-502		. . Trim Pot., SPECTROL/ Equiv.	1

Ref. Symbol	Part No.	IFR Stock No.	Description	Qty Per Assy
Dwg. Ref. 3-23-0034		1-23-0076	Scope Main Board Assy. (cont'd)	REF
S3401	5P6042		. . 7 Pos., 3 Pole sw., CTS/Equiv.	1
S3402	CK-7303		. . TPDT CTR OFF sw., CTS/Equiv.	1
S3403	5P6043		. . 5 Pos., 2 Pole Pot. sw., CTS/Equiv.	1

7.9-1 Oscilloscope Assy. 1-23-0700

Ref. Symbol	Part No.	IFR Stock No.	Description	Qty Per Assy
Dwg. Ref. 3-23-0703		1-23-0700	Oscilloscope Assy. (Eff: S/N 1070 & on)	REF
		1-23-0016	. Graticule	1
	3RP-1		. CRT, RCA/Equiv.	1
		3-23-0622	. Side Frame, Right	1
		3-23-0631	. Side Frame, Left	1
		1-23-0624	. Inverter P.C. Bd. Assy.	1
		1-23-0625	. Main P.C. Bd. Assy.	1
S-65601		1-23-0668	. . Vert. Gain Switch Assy.	1
R-65603		1-23-0077	. . Vert. Gain Control Pot.	1
S-65602	CK7303		. . TPDT, Ctr. OFF switch C & K/Equiv.	1
S-65603		3-23-0667	. . Horiz. Sweep Switch Assy.	1
R-65602		1-23-0078	. . Horiz. Sweep Control & Switch Assy.	1
		3-23-0701	. Front Plate Assy.	1
R-65604		1-76-0148-1	. . Vert. Center Control	1
R-65601		1-76-0161	. . Horiz. Center Control	1
3-23-0665		1-23-0624	. Scope Inverter P.C. Bd. Assy.	REF
		1-23-0606	. . Scope Inverter P.C. Bd.	1
BR-1	VH248		. . Bridge Rectifier, VARO/Equiv.	1

Ref. Symbol	Part No.	IFR Stock No.	Description	Qty Per Assy
Dwg. Ref. 3-23-0665		1-23-0624	. Scope Inverter P.C. Bd. Assy.	REF
CR1 & 2	MR250-5		. . Diode, MOTOROLA/ Equiv.	2
CR3 thru CR6	1N4004		. . Diode, DICKSON/ Equiv.	4
CR7	1N4148		. . Diode, DICKSON/ Equiv.	1
CR8	1N5278B		. . Zener Diode, (170V) MOTOROLA/Equiv.	1
Q1	40321		. . Transistor, RCA/Equiv.	1
Q2 & 3	SJE1461		. . Transistor, MOTOROLA/ Equiv.	2
Q4	2N2222		. . Transistor, MOTOROLA/ Equiv.	1
U-1	HP5082-4350		. . Opto-Isolator, HP/ Equiv.	1
R-6	CM42300		. . Potentiometer, (FOCUS) CLARASTAT/Equiv.	1
R-8	CM42299		. . Potentiometer, (INTENSITY) CLAROSTAT/ Equiv.	1
Dwg. Ref. 4-23-0612		1-23-0625	. Scope Main Board Assy.	REF
		2-23-0604	. . Scope Main P.C. Bd.	1
X1 & 9	SN72741		. . IC, TI/Equiv.	2
X2, 4 & 7	CA3130T		. . IC, RCA/Equiv.	3
X3, 5, & 8	CD4066		. . IC, RCA/Equiv.	3
X6	SN72709		. . IC, TI/Equiv.	1

Ref. Symbol	Part No.	IFR Stock No.	Description	Qty Per Assy
Dwg. Ref. 4-23-0612		1-23-0625	. Scope Main Board Assy.	REF
Q1	2N2905		. . Transistor, RCA/Equiv.	1
Q2, 6, 12, & 18	2N2222		. . Transistor, MOTOROLA/ Equiv.	4
Q4, 5, 16, & 17	40321		. . Transistor, RCA/Equiv.	4
Q7, 8, 9, 14, & 15	2N3251		. . Transistor, NATIONAL/ Equiv.	5
Q10 & 11	2N3646		. . Transistor, GE/Equiv.	2
Q13	2N2405		. . Transistor, MOTOROLA/ Equiv.	1
CR1	LM329CZ		. . Zener Diode, NATIONAL/ Equiv.	1
CR2, 3 & 8 thru 12	1N4148		. . Diode, DICKSON/Equiv.	7
CR4	1N5231		. . Diode, DICKSON/Equiv.	1
CR13	1N5229		. . Diode, DICKSON/Equiv.	1
R-6	62-2-1-202		. . Trim Pot., SPECTROL/ Equiv.	1
R-8	62-2-1-201		. . Trim Pot., SPECTROL/ Equiv.	1
R-40,61	62-2-1-502		. . Trim Pot., SPECTROL/ Equiv.	1
R-58	62-2-1-103		. . Trim Pot., SPECTROL/ Equiv.	1
R-67	62-2-1-102		. . Trim Pot., SPECTROL/ Equiv.	1
C2	DV11PS35D		. . Trim Cap., ELMENCO/ Equiv.	1

7.10 Coaxial Cables

Dwg. Ref 4-23-0474 Cable Number	Cable Connections	IFR Stock No.
1	RF Attenuator to 2nd Mixer & Diode Sw. Assy.	1-23-0237-1
2	120 MHz receiver to 250 kHz IF,Mon., Audio Bd.	1-23-0237-2
3	AM-FM Generator to RF Attenuator	1-23-0237-3
4	AM-FM Generator. to 2nd Mixer & Diode Sw. Assy.	1-23-0237-4
5	Clock Divider to AM-FM Generator	1-23-0237-5
6	10 MHz Oven & Oscillator to Clock Divider	1-23-0237-6
7	2nd Mixer & Diode Sw. Assy to 120 MHz Receiver	1-23-0237-7
8	10 MHz Oven & Oscillator to 10 MHz Out Jack (J-103)	1-23-0237-8
9	1080 MHz Mult. Amp. to 2nd Mixer & Diode Sw. Assy.	1-23-0237-9
10	108 MHz Filter to 1080 MHz Mult. Amp	1-23-0237-10
11	10 MHz Oven & Oscillator to 100 MHz Mult. 108 MHz Mixer.	1-23-0237-11
12	10 MHz Oven & Oscillator to 2nd Mixer & Diode Sw. Assy.	1-23-0237-12
13	Diode Protect & 1st Mixer to Change Over Relay	1-23-0237-13
14	1st Mixer to 1200 MHz Filter & T.R. Switch	1-23-0237-14
15	1200 MHz Filter & T.R. Switch to 2nd Mixer & Diode Sw. Assy	1-23-0237-15
16	1200 MHz Filter & T.R. Switch to 1200 MHz Amp.	1-23-0237-16
17	1200 MHz Filter & T.R. Switch to 1200 MHz Amp.	1-23-0237-17
18	VCO PWR Divider to 1st Mixer	1-23-0237-18

Dwg. Ref 4-23-0474 Cable Number	Cable Connections	IFR Stock No.
19	VCO Tuner to Tune Summation	1-23-0237-19
20	VCO Tuner to Tune Summation	1-23-0237-20
21	VCO PWR Divider to High Freq. Mult. Mixer	1-23-0237-21
22	High Freq. Mult. Mixer to Het Amp ÷ 2 Prescaler	1-23-0237-22
23	100 MHz Filter Amp to High Freq. Mult. Mixer	1-23-0237-23
24	Het Amp ÷ 2 Prescaler to HF Ø Lock Loop	1-23-0237-24
25	HF Ø Lock Loop to VCO tuner	1-23-0237-25
26	79-80 MHz Ø Lock Loop to 100 MHz Mult. 108 Mixer	1-23-0237-26
27	Antenna Jack (J-27) to Static Protect Block	1-23-0237-27
28	100 MHz Mult. 108 MHz Mixer to 100 MHz Filter Amp.	1-23-0237-28
29	Change over Relay to 20 dB pad	1-23-0237-29
30	100 MHz Mult. 108 MHz Mxr. to 108 MHz Filter	1-23-0237-30
31	Static Protect Block to Change over Relay	1-23-0237-31
32	2nd Mixer & Diode Sw. Assy to HF Ø Lock Loop	1-23-0237-32
33	Oscilloscope input to J-108 (front panel)	1-23-0237-33
34	AGC System Assy. to Tune Summation	1-23-0237-34
Semi-Rigid Coax.	TRANS-RCVR Jack (J-102) to 20dB pad	3-23-0308

7.11 Case Assy 1-23-0429

Dwg. 4-23-0474 Ref. Symbol	Part No.	IFR. Stock No.	Description	Qty Per Assy
		1-23-0429	Case Assy.	REF
		3-76-0164-1	. Case, Modified	1
	MP-40008-3		. . Wire Bail & (4) Mounting Feet Kit	1
		3-76-0164-2	. Case Cover, Modified	1
			. . Clip on Receptacle, SOUTHCO	2
	006-PL		. . Handle w/mtg screws, Phila. Handle Co.	1
		2-23-0420	. . Accessor Storage Cover	1
	85-12-160-16		. . ¼ Turn Fastner, SOUTHCO	2
	85-34-101-17		. . ¼ Turn Fastner Split Ring Retainer	2
	UG-306/U		. . 90° BNC Adapter, Male to Female	1
	MLD-1.25		. . Fuse, 1.25 Amp. Buss Slo-Blo	1
	AGC-7½		. . Fuse, 7½ Amp. Buss	2
		1-76-0165	. . Antenna	1
		2-23-0266-1	. . Ext. DC Power Cable	1
		2-23-0266-2	. . AC Power Cable	1

CARD EDGE CONNECTOR PIN LAYOUT,
AS VIEWED FROM BOTTOM OF SET, FOR:

FM/AM 1000 REGULATOR & POWER SUPPLY BOARD

FM/AM 1000 100kHz – IF – MONITOR AUDIO BOARD

FM/AM 1000A REGULATOR & POWER SUPPLY BOARD (J-17)

FM/AM 1000A 250kHz – IF – MONITOR AUDIO BOARD (J-13)

Figure 6-7

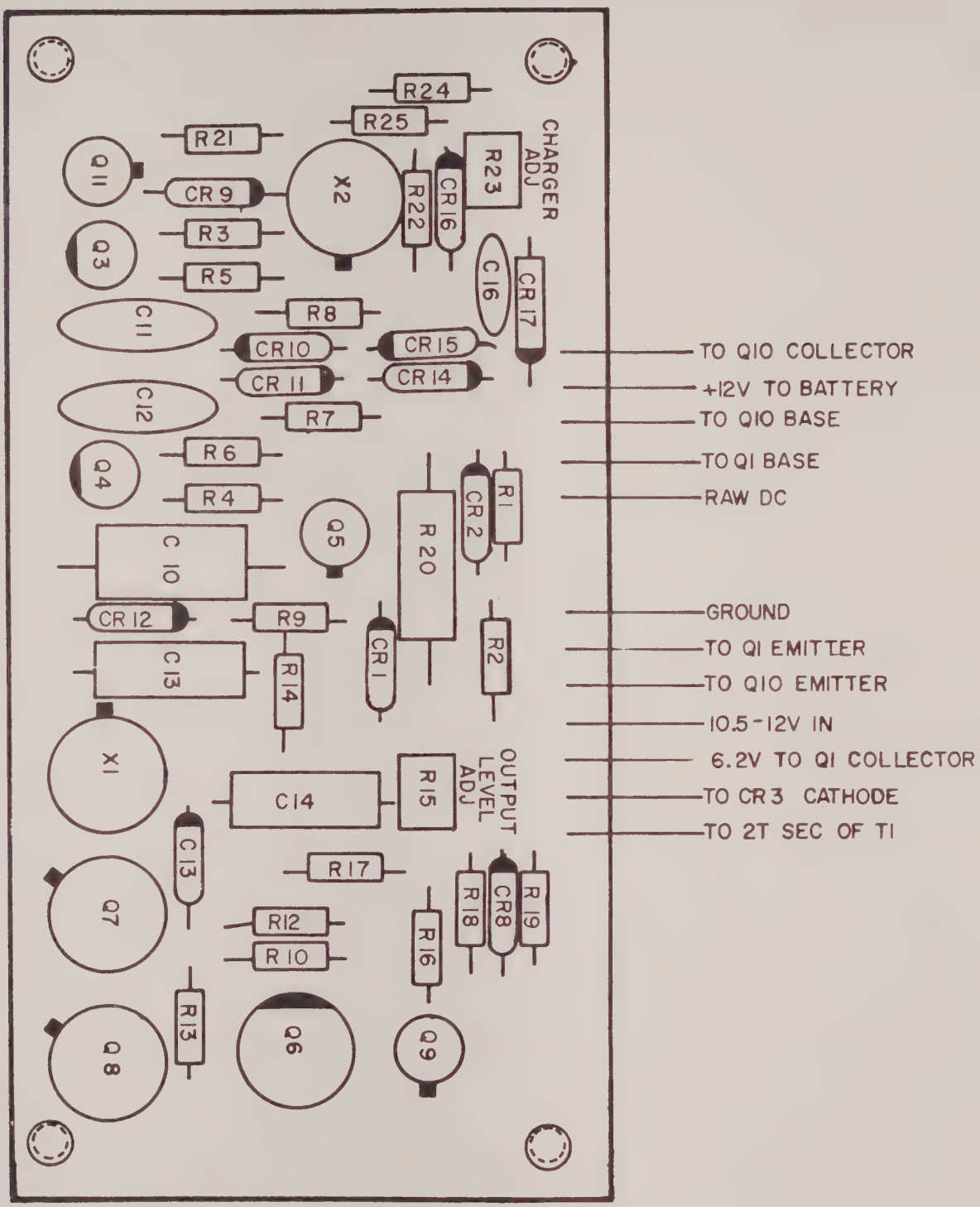

DUTY CYCLE REGULATOR PARTS LAYOUT

Figure 6-12A

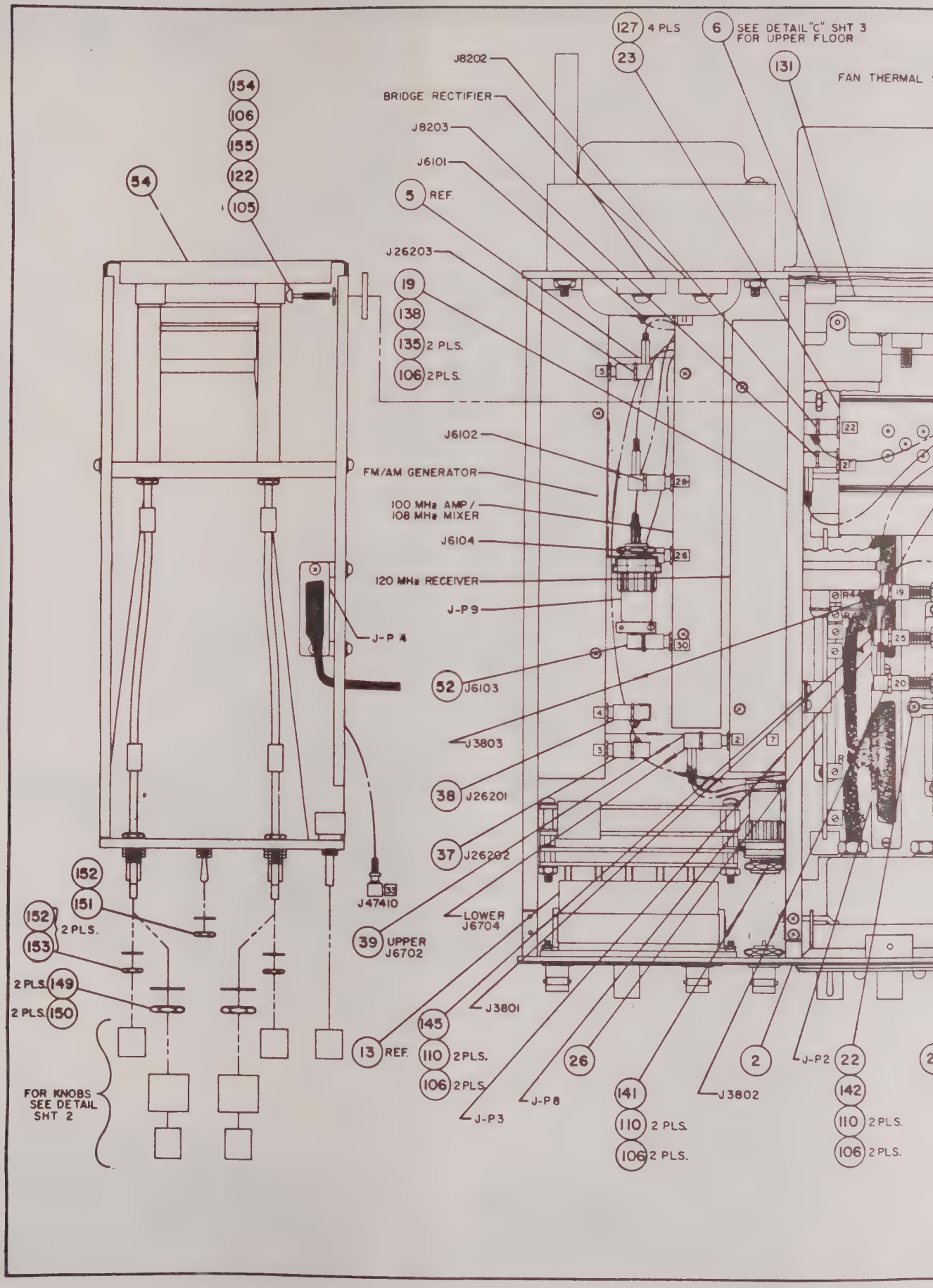
127 4 PLS
23
6 SEE DETAIL "C" SHT 3 FOR UPPER FLOOR
131
FAN THERMAL
J8202
BRIDGE RECTIFIER
J8203
J6101
5 REF.
J26203
19
138
135 2 PLS.
106 2 PLS.
J6102
FM/AM GENERATOR
100 MHz AMP / 108 MHz MIXER
J6104
120 MHz RECEIVER
J-P 9
J-P 4
52 J6103
J3803
38 J26201
37 J26202
J47410
LOWER J6704
39 UPPER J6702
J3801
145
110 2 PLS.
106 2 PLS.
13 REF.
26
J-P8
J-P3
141
110 2 PLS.
106 2 PLS.
2
J3802
J-P2
22
142
110 2 PLS.
106 2 PLS.
154
106
155
122
105
54
152
151
152
153
2 PLS.
2 PLS. 149
2 PLS. 150
FOR KNOBS SEE DETAIL SHT 2

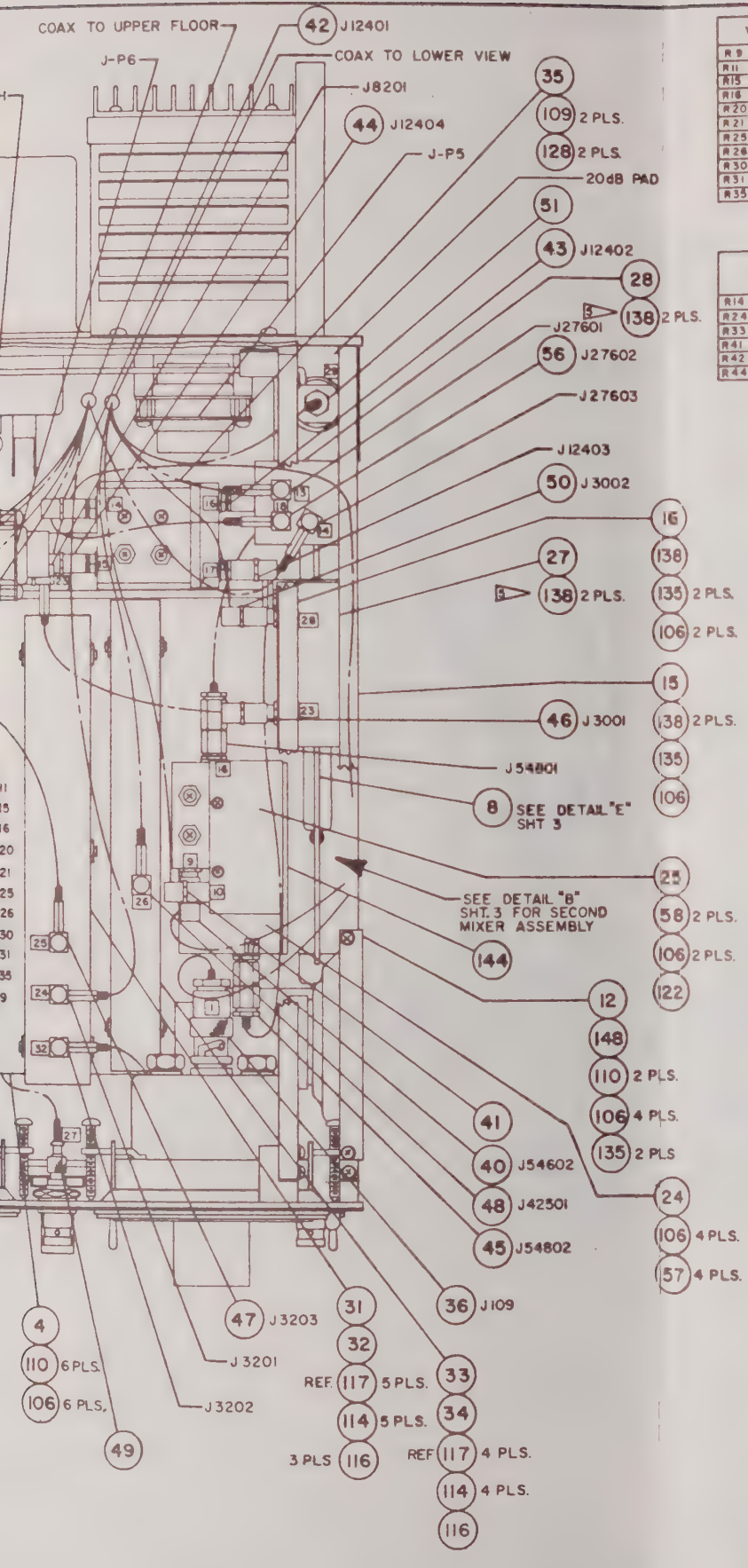

VCO TUNER ADJUST	
R 9	INTEGRATOR CENTERING
R11	0-199 RANGE
R15	0-199 CTR
R16	200-399 RANGE
R20	200-399 CTR
R21	400-599 RANGE
R25	400-599 CTR
R26	600-799 RANGE
R30	600-799 CTR
R31	800-999 RANGE
R35	800-999 CTR

REGULATOR & POWER SUPPLY ADJUST	
R14	LOW VOLTAGE CUTTOFF
R24	+11V ADJUST
R33	OVEN LOW VOLTAGE CUTTOFF
R41	ZERO POWER ADJUST
R42	0-100W ADJUST
R44	0-10W ADJUST

DATE	REV	CHANGE	AF

FM/AM 1000S (EFF. ALL)&
FM/AM 1000A (EFFECTIVE: S/N 1070 & ON)
SEE DRAWING # 4-23-0700 FOR
OSCILLOSCOPE ASSEMBLY DETAILS.

SEE SHT 3 FOR LIST OF MATERIALS

ITEM	REQ'D	PART NO.	DESCRIPTION
			LIST OF MATERIALS

TOLERANCES

- IFR INC -
WICHITA, KANSAS

COMPOSITE ASSEMBLY

D 4-23-0682 6

NONE

SHEET 1 OF 3

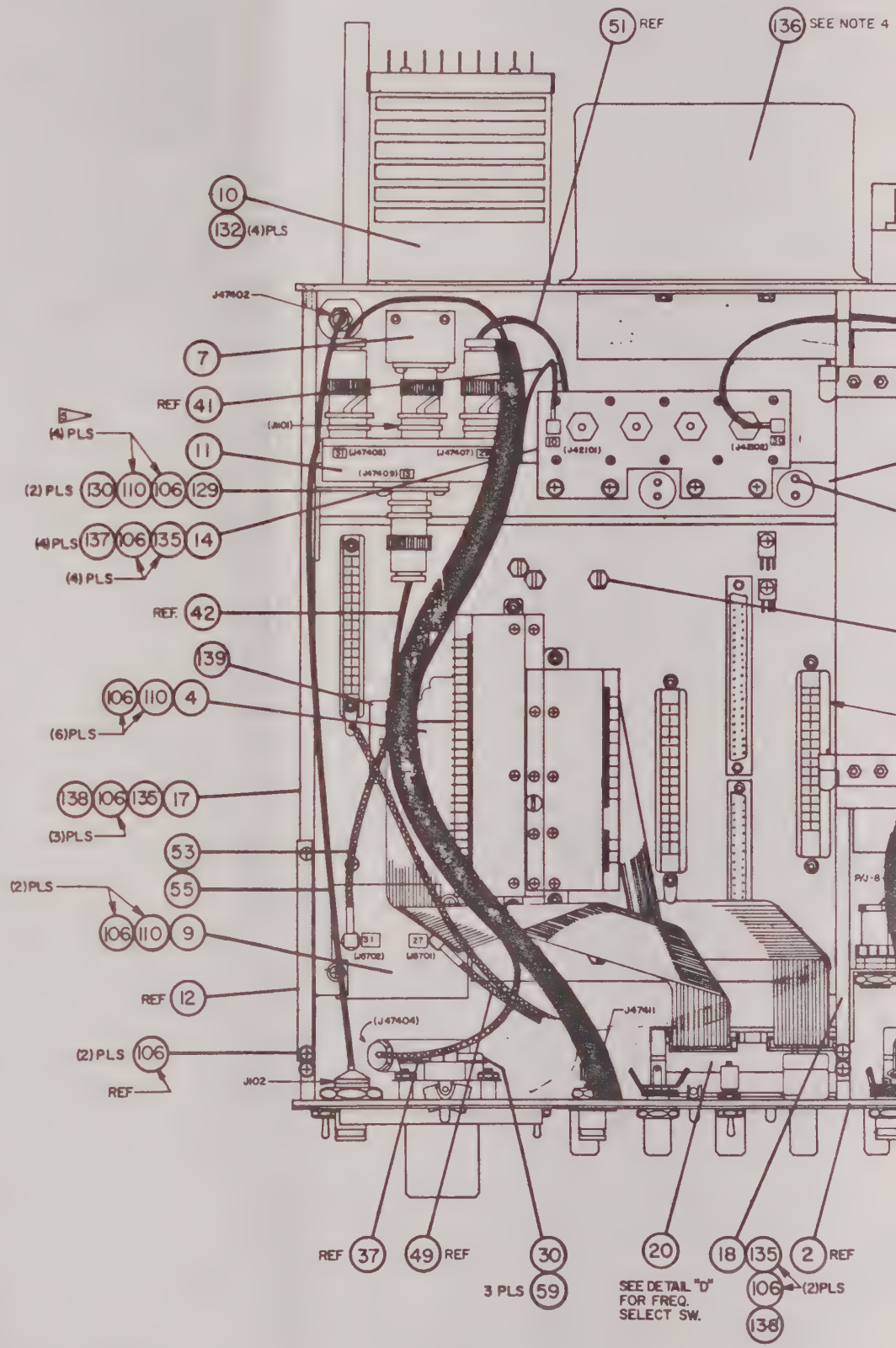
51 REF
136 SEE NOTE 4
10
132 (4) PLS
J47402
7
REF 41
(4) PLS
11
(2) PLS 130 110 106 129
(4) PLS 137 106 135 14
(4) PLS
REF. 42
139
106 110 4
(6) PLS
138 106 135 17
(3) PLS
53
(2) PLS
55
106 110 9
REF 12
(2) PLS 106
REF
J102
(J47404)
J47411
REF 37
49 REF
30
3 PLS 59
20
SEE DETAIL "D" FOR FREQ. SELECT SW.
18 135 2 REF
106
(2) PLS
138

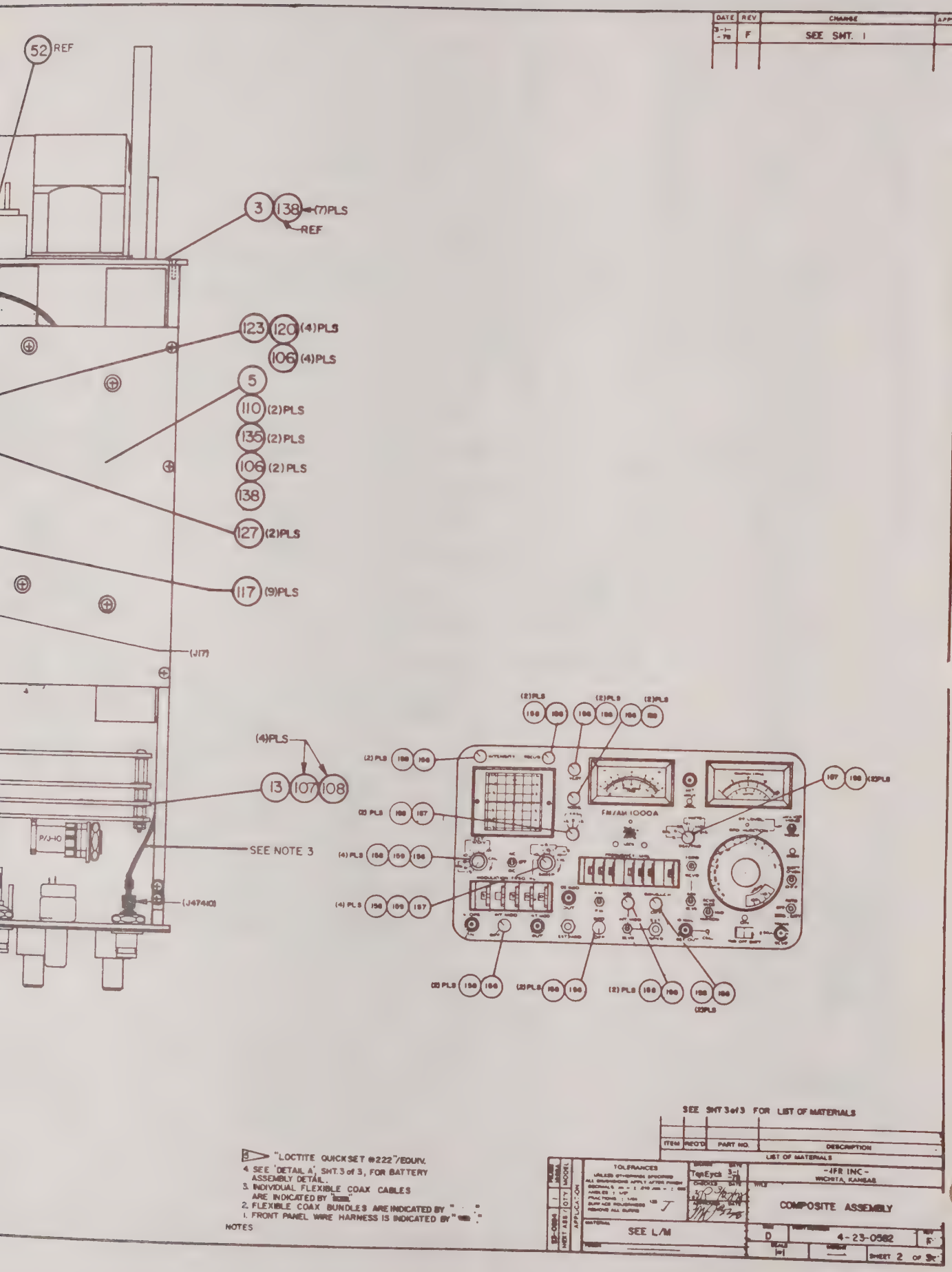

DATE
REV
CHANGE
APP'D
F
SEE SHT. 1
52 REF
3
138
(7)PLS
REF
123
120
(4)PLS
106
(4)PLS
5
110
(2)PLS
135
(2)PLS
106
(2)PLS
138
127
(2)PLS
117
(9)PLS
(J17)
(4)PLS
13
107
108
SEE NOTE 3
(J47410)
P/J-10
(2)PLS
FM/AM 1000A
SEE SHT 3 of 3 FOR LIST OF MATERIALS
ITEM
REQ'D
PART NO.
DESCRIPTION
LIST OF MATERIALS
"LOCTITE QUICKSET #222"/EQUIV.
4. SEE 'DETAIL A', SHT. 3 of 3, FOR BATTERY ASSEMBLY DETAIL.
3. INDIVIDUAL FLEXIBLE COAX CABLES ARE INDICATED BY
2. FLEXIBLE COAX BUNDLES ARE INDICATED BY
1. FRONT PANEL WIRE HARNESS IS INDICATED BY
NOTES
TOLERANCES
-IFR INC-
WICHITA, KANSAS
COMPOSITE ASSEMBLY
SEE L/M
D
4-23-0582
F
SHEET 2 OF 3

Figure 6-1-2

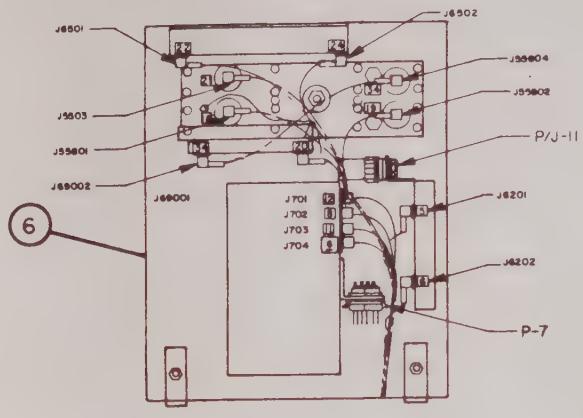

DETAIL C
SCALE $\frac{1}{2}$" = 1"

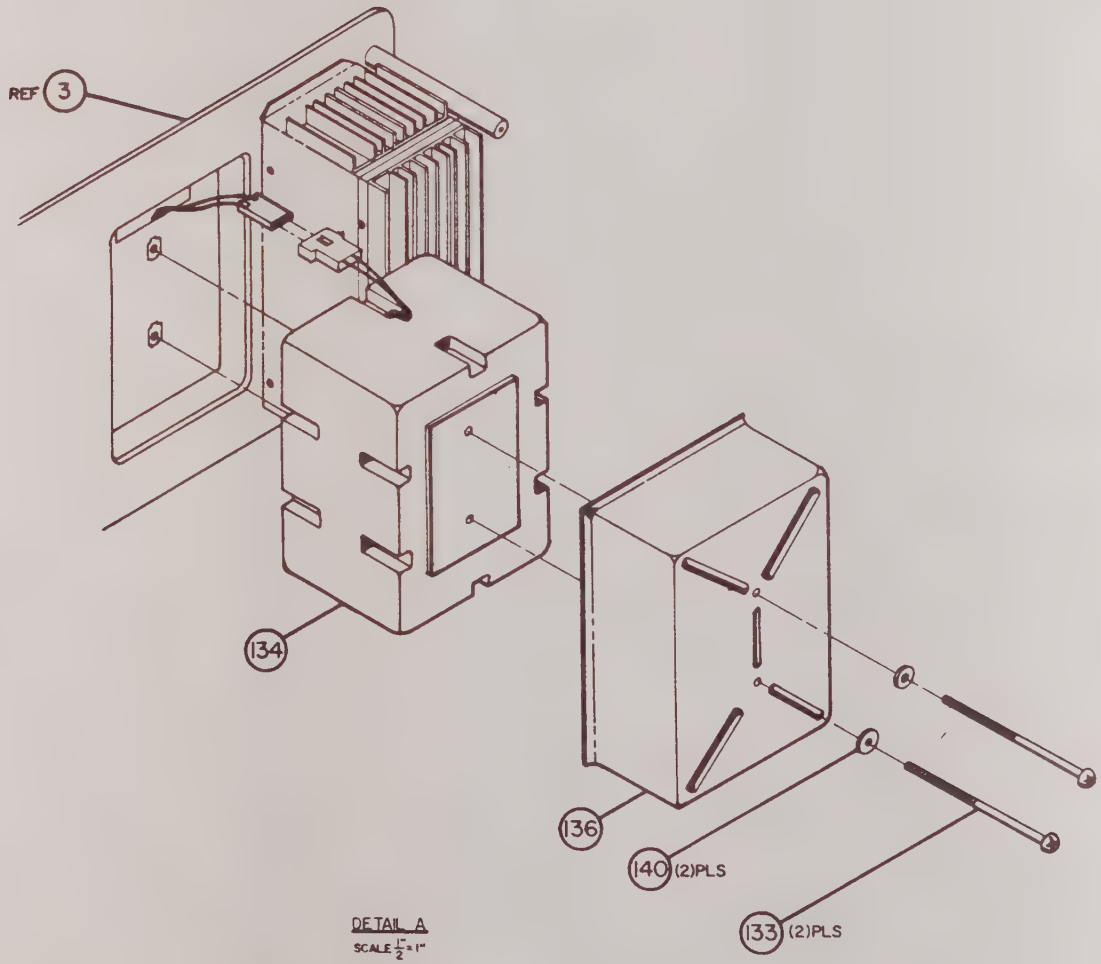

DETAIL A
SCALE $\frac{1}{2}$" = 1"

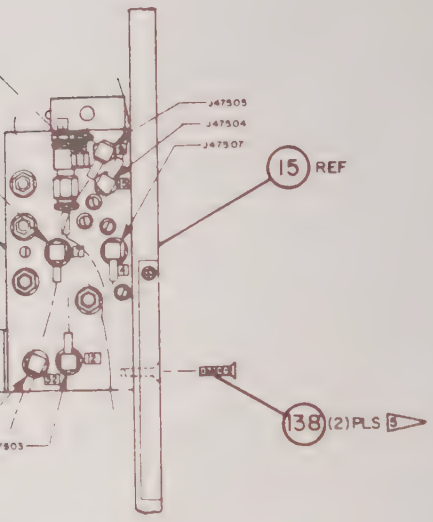

DETAIL B

SCALE 1"=1"

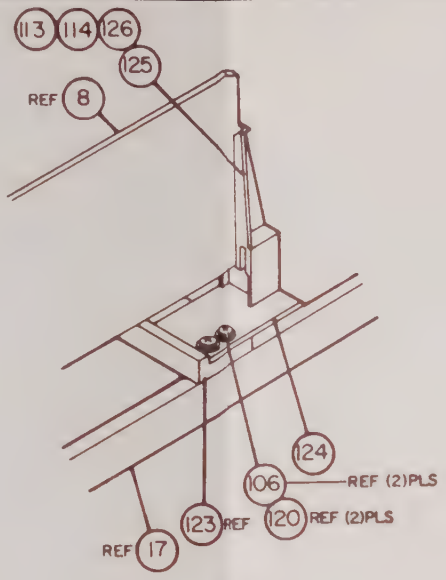

DETAIL E

SCALE 1"=1"

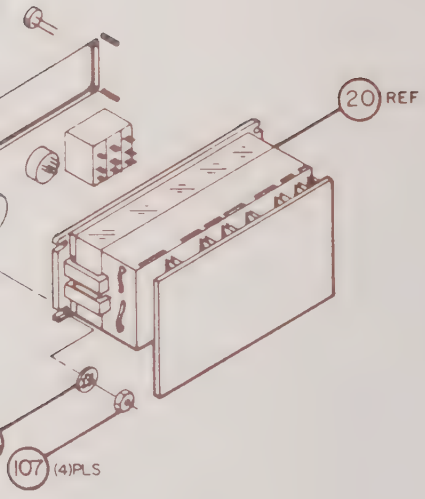

DETAIL D

SCALE $\frac{3}{4}$"=1"

REAR VIEW OF ITEM 2 FRONT PANEL

ITEM	REQ'D	PART NO	DESCRIPTION
159	2	1-09 0220	KNOB "SWEEP, EXT"+/DIV
158	28	02-56x1/8	SOCKET HEAD SET SCREW
157	3	1-09 0219-2	KNOB "KHz, DEV/PWR
156	9	1-09-0219-1	KNOB
155	1	76-0002-19	WASHER
154	1	#4-40	LARGE PATTERN HEX NUT
153	2	1/4-32	EXTRA SMALL PATTERN HEX NUT
152	3	76-0002-8	PANEL WASHER
151	1	1/4x40	EXTRA SMALL PATTERN HEX NUT
150	2	76 0002-5	"HH SMITH"/EQUIV FLAT WASHER
149	2	3/8x32	EXTRA SMALL PATTERN HEX NUT
148	1	1-23-0575	RETAINER
147	1	AD537-0YB	"ARMEREX"/EQUIV SPEAKER (REF)
146	1	2-23 0574	SPEAKER MOUNTING PLATE (REF)
145	1	1-23-0355	PC BD RETAINER
144	1	2-23-0274	1080 MHz MULTIPLIER AMPLIFIER MTG BRACKET
143	2	2-23-0366	INSULATOR
142	1	76-0001-83	STANDOFF
141	1	1-23 0409	CONNECTOR MOUNTING BRACKET
140	2	AN960 D10L	FLAT WASHER
139	1	ABMS-AS	"PANDUIT"/EQUIV CABLE TIE MOUNT
138	13	#4-40x3/8	PPHMS
137	4	76-0001-81	SPACER
136	1	1-23-0073	BATTERY COVER
135	16	#4-40x1/2	PPHMS
134	1	H76-0245	MODIFIED "GATES"/EQUIV 0800-0008 BATTERY
133	2	1-76-0173	MODIFIED ROUND HEAD BOLT #10-32 x 3 3/4 LG.
132	4	#6-32x1/4	PPHMS
131	1	1-23-0171	HINGE ROD
130	2	#4-40x7/16	PFHMS
129	1	2-23-0144	CHANGE OVER RELAY MOUNTING BRACKET
128	2	2-76-0001-18	STANDOFF
127	4	#4-40x1/2	SOCKET HEAD CAP SCREW
126	1	#6-32x5/8	PPHMS
125	1	67782-1	"AMP"/EQUIV PC CARD GUIDE
124	1	1-23-0339	MOUNTING PLATE, PC CARD GUIDE
123	1	2-23-0280	MTG BRKT, 1200 MHz FILTER, HIGH FREQ. MULT. MOD.
122	1	AN960-C4	WASHER 5/16 OD
121	12	08-3-3	"STIMPSON"/EQUIV RIVET
120	4	#4-40x3/8	PPHMS
119	2	1-23-0528	GROUNDING STRIP (REF)
118	2	2-23-0611	INSULATOR (REF)
117	9	1-76-0174	HEX NUT
116	4	#10	INTERNAL TOOTH LOCKWASHER
115	4	#10-32	EXTRA SMALL PATTERN HEX NUT (REF)
114	10	#6	INTERNAL TOOTH LOCKWASHER
113	1	#6-32	HEX NUT SMALL PATTERN
112	9	MS35047044-8	RIVET 1/8 DIA x 1/8 LONG (REF)
111	9	1500	"HH SMITH"/EQUIV #6-32 SPADE LUG (REF)
110	28	#4-40x1/4	PPHMS
109	2	#4-40x3/4	SOCKET HEAD CAP SCREW
108	8	#2	INTERNAL TOOTH LOCKWASHER
107	8	#2-56	LARGE PATTERN HEX NUT
106	57	#4	INTERNAL TOOTH LOCKWASHER
105	1	1-76-0326	CAPTIVE SCREW

ITEM	REQ'D	PART NO	DESCRIPTION
59	3	82 56x.1/4	PFHMS
58	2	84 40x3/16	PBHMS
57	4	84 40x5/16	PBHMS
56	1	23-0237-14	FLEXIBLE COAX CABLE ASSEMBLY
55	1	3-23-0457	SEMI-RIGID COAX ASSEMBLY
54	1	1-23-0484	SCOPE ASSEMBLY
53	1	23-0237-34	
52	1	23-0237-30	
51	1	23-0237-29	
50	1	23-0237-28	
49	1	23-0237-27	
48	1	23-0237-26	
47	1	23-0237-25	
46	1	23-0237-23	
45	1	23-0237-17	
44	1	23-0237-15	
43	1	23-0237-14	
42	1	23-0237-13	
41	1	23-0237-10	
40	1	23-0237-9	
39	1	23-0237-7	
38	1	23-0237-4	
37	1	23-0237-3	
36	1	3-23-0237-1	FLEXIBLE COAX CABLE ASSEMBLIES
35	1	1-23-0297	1200MHz FILTER/DIODE SWITCH ASS'Y
34	1	3-23-0442	79-80MHz OSC & LOCK LOOP PC BD ENCLOSURE
33	1	1-23-0424	79-80 MHz OSC & LOCK LOOP PC BOARD ASS'Y
32	1	3-23-0486	HIGH FREQUENCY & LOCK PC BOARD ENCLOSURE
31	1	1-23-0488	HIGH FREQUENCY & LOCK PC BOARD ASSEMBLY
30	1	1-23-0534	ATTENUATOR KIT
29	1	4-23-0482	SECOND MIXER ASSEMBLY
28	1	H-23-0290	FIRST MIXER ASSEMBLY
27	1	1-23-0483	100MHz FILTER ASSEMBLY
26	1	H-23-0091	REGULATOR AND POWER SUPPLY PC BD ASS'Y
25	1	1-23-0548	1080MHz MULTIPLIER AMPLIFIER ASSEMBLY
24	1	1-23-0684	1200 MHz AMPLIFIER ASSEMBLY
23	1	3-23-0087	HIGH FREQ MULTIPLIER MIXER ASSEMBLY
22	1	1-23-0426	VCO TUNER PC BOARD RETAINER
21	1	H-23-0423	VCO TUNER PC BOARD ASSEMBLY
20	1	1-23-0433	7 DIGIT FREQUENCY SELECT SWITCH ASS'Y
19	1	2-23-0484	
18	1	2-23-0183	
17	1	2-23-0188	
16	1	2-23-0184	
15	1	2-23-0187	FRAME SUPPORT MEMBER
14	1	2 23-0402	1088MHz BANDPASS FILTER ASSEMBLY
13	1	1-23-0188	TONE GENERATOR ASSEMBLY
12	1	2-23 0234	SPEAKER ASSEMBLY
11	1	1-76-0180	RELAY
10	1	4-23-0384	DUTY CYCLE REGULATOR ASSEMBLY
9	1	1 23 0488	STATIC DISCHARGE PROTECTOR ASSEMBLY
8	1	1-23-0873	250KHz IF MONITOR AUDIO PC BD ASSEMBLY
7	1	1-23-0228	POWER MONITOR ASSEMBLY
6	1	H-23-0236	UPPER FLOOR ASSEMBLY
5	1	-23-0482	LOWER FLOOR ASSEMBLY
4	1	3-23-0581	MOTHER BOARD ASSEMBLY
3	1	1-23 0580	REAR PANEL ASSEMBLY
2	1	3-23-0879	FRONT PANEL ASSEMBLY
1	1	4-23-0582	COMPOSITE ASSEMBLY

LIST OF MATERIALS

NEXT ASSY	1		
USED ON			
APPLICATION	1-23-0582		

TOLERANCES

UNLESS OTHERWISE SPECIFIED
ALL DIMENSIONS APPLY AFTER PLATING
DECIMALS .X ±0.1 .XX ±0.05 .XXX ±0.010
ANGLES ±1°
FRACTIONS ±1/64
SURFACE ROUGHNESS 125 ✓
REMOVE ALL BURRS

DRAWN Tom Eych 2-22-71
CHECKED
ENGINEER
MFG APPROVAL

- IFR INC -
WICHITA, KANSAS

TITLE: COMPOSITE ASSEMBLY

MATERIAL: SEE L/M

SIZE D | DRAWING NO. 4-23-0582 | REV F

SCALE AS NOTED | WEIGHT | SHEET 3 OF 3

Figure 6-1-3

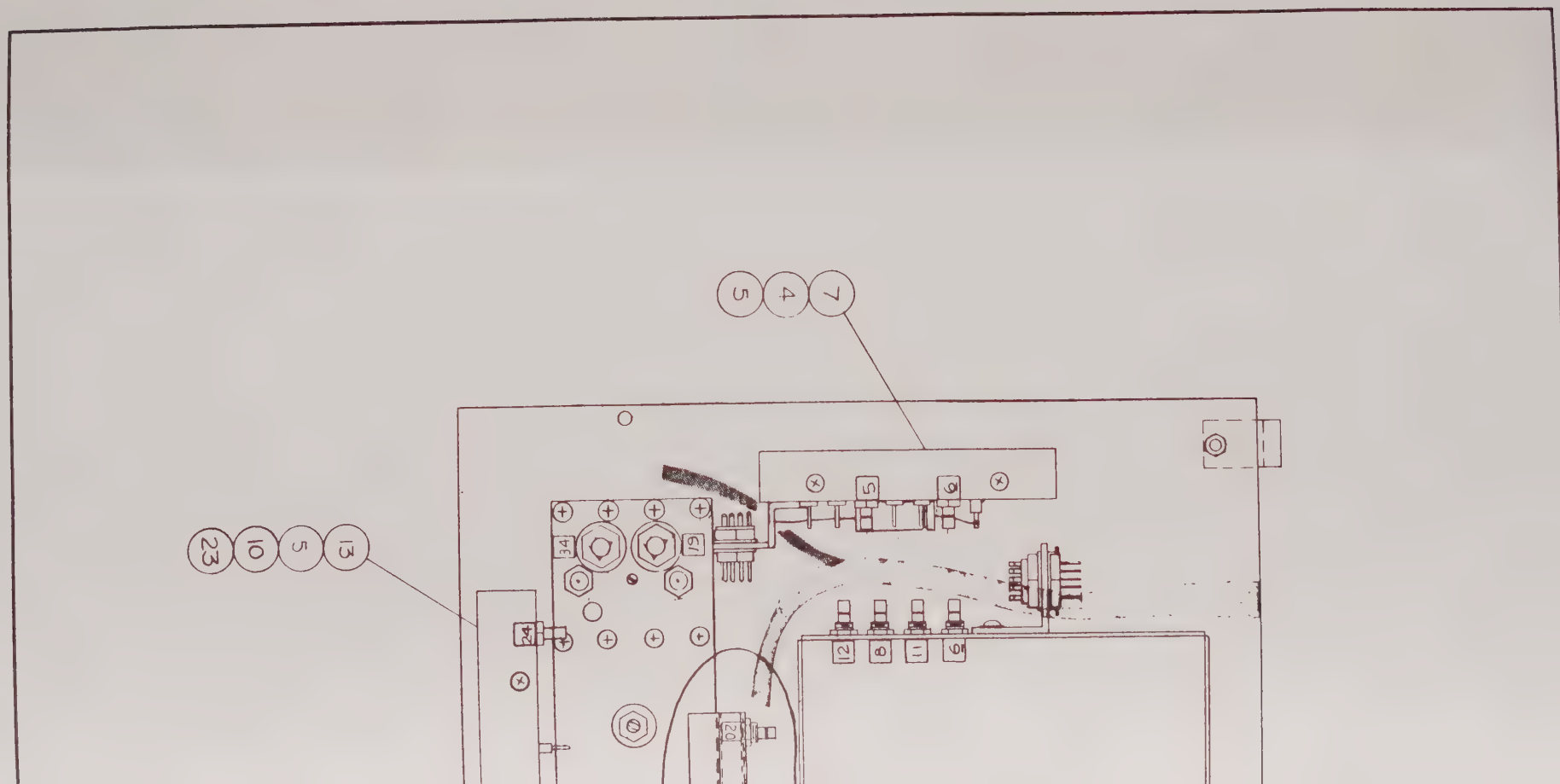
5
4
7
23
10
5
13
34
19
24
5
6
12
8
11
9
20

DATE	REV	CHANGE	AP
[illegible]	A	INCORPORATED ECN # [illegible]	[illegible]
[illegible]	B	INCORPORATED ECN SER [illegible] GLD	[illegible]
[illegible]	C	INCORPORATED ECN # [illegible]	[illegible]
[illegible]	D	INCORPORATED ECN # [illegible] GLD	[illegible]
[illegible]	E	INCORP ECN # [illegible]88 GLD	[illegible]
[illegible]	F	INC ECN # 1669 RKK	[illegible]
[illegible]	G	INC ECN # 1873	[illegible]
[illegible]	[illegible]	[illegible]	[illegible]

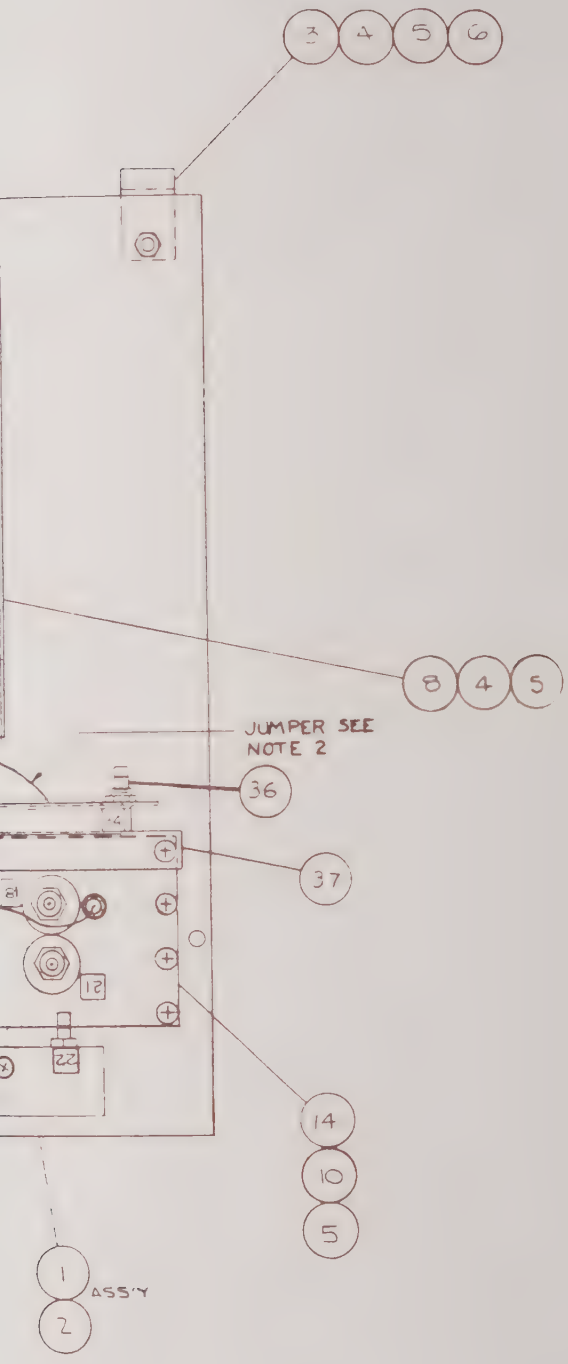

NOTE:
1. ATTACH COAX CABLES, (ITEMS 24-36) TO APPROPRIATE NUMBER AND ROUTE TO CORRECT LOCATION. EXACT POSITION OF CABLES NOT SHOWN.
2. ROUTE JUMPER WIRE AROUND PC BOARD AS SHOWN. (R/W #26AWG).

ITEM	REQ'D	PART NO.	DESCRIPTION
37	1	23-0694	AGC PC BD MTG BRKT
36	1	23-0686	AGC PC BD ASSY
35	1	3-23-0237-24	
34	1	3-23-0237-22	
33	1	3-23-0237-21	
32	1	3-23-0237-20	
31	1	3-23-0237-19	
30	1	3-23-0237-18	
29	1	3-23-0237-12	
28	1	3-23-0237-11	
26	1	3-23-0237-8	
25	1	3-23-0237-6	
24	1	3-23-0237-5	RF CABLE
23	2	2-76-[illegible]	SPACER
14	1	23-0560	1200-2200 MHz OSC ASSY
13	1	23-0225	÷2 PRESCALER ASS'Y
10	6	#4-40X[illegible]	PHIL SCREW, BIND HEAD
8	1	23-0218	10MHz OVEN OSC. ASS'Y
7	1	23-0217	CLOCK DIVIDER ASS'Y
6	2	#4-40	LARGE PATTERN HEX NUT
5	14	#4	INT. TOOTH LOCKWASHER
4	8	#4-40X1/4	PHIL. SCREW, BIND HEAD
3	2	23-0170	UPPER FLOOR HINGE
2	1	23-0608	UPPER FLOOR
1	1	23-0216	UPPER FLOOR ASS'Y

LIST OF MATERIALS

NEXT ASSY	QTY	MODEL
23-0216	1	FM/AM 1000

APPLICATION

TOLERANCES
UNLESS OTHERWISE SPECIFIED
ALL DIMENSIONS APPLY AFTER FINISH
DECIMALS .XX = ± .010 .XXX = ± .005
ANGLES ± 1/2°
FRACTIONS ± 1/64
SURFACE ROUGHNESS 125 J
REMOVE ALL BURRS

DRAWN JNV DATE 7/2/74
CHECKED [illegible] DATE 1-23-75
APPROVED [illegible] DATE 2-3-75

MATERIAL SEE ABOVE
TREATMENT —
FINISH —

INSTRUMENT FLIGHT RESEARCH CORPORATION
WICHITA, KANSAS

TITLE UPPER FLOOR ASSEMBLY FM/AM 1000

SIZE C | PART NUMBER 3-23-0216 | REV d
SCALE 1:1 | WEIGHT — | SHEET 1 OF 1

Figure 6-2

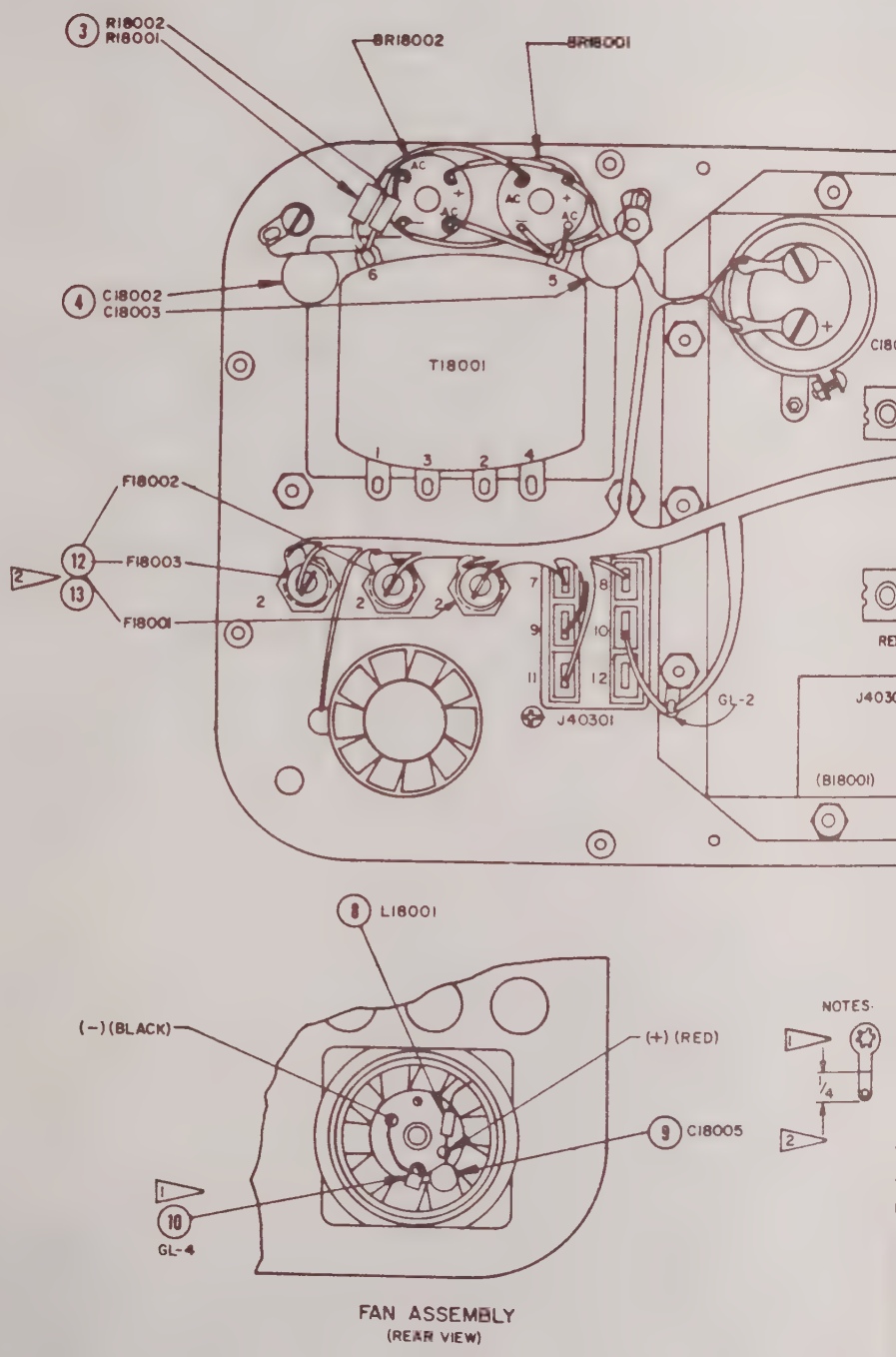

FAN ASSEMBLY
(REAR VIEW)

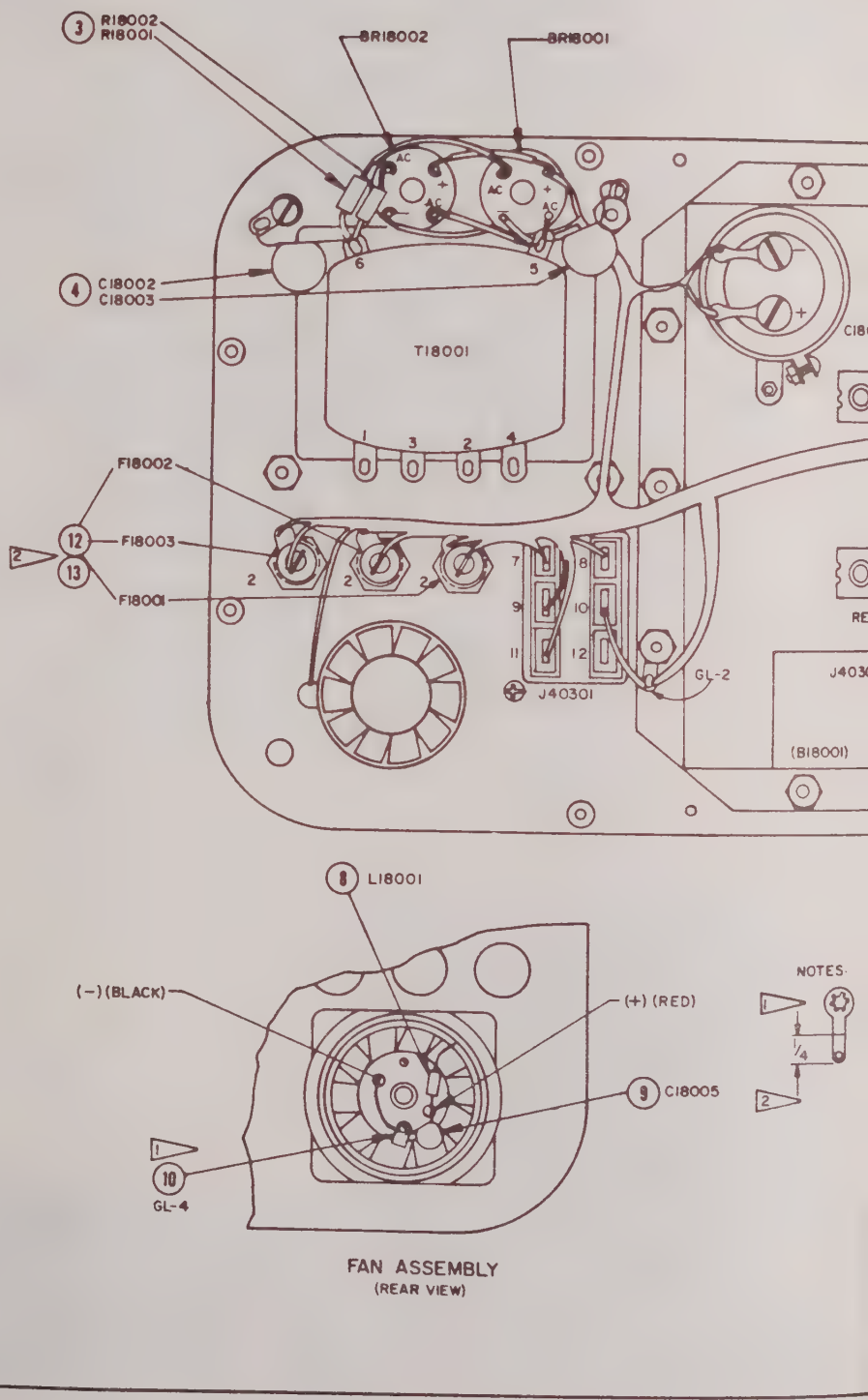

FAN ASSEMBLY
(REAR VIEW)

DATE	REV	CHANGE	AP
		SEE SHEET 1 of 3	

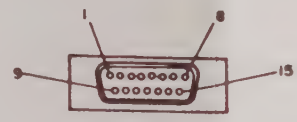

DETAIL A

REAR VIEW
PIN CONFIGURATION
FOR J-5, J-12
("AMP" 205205-1)

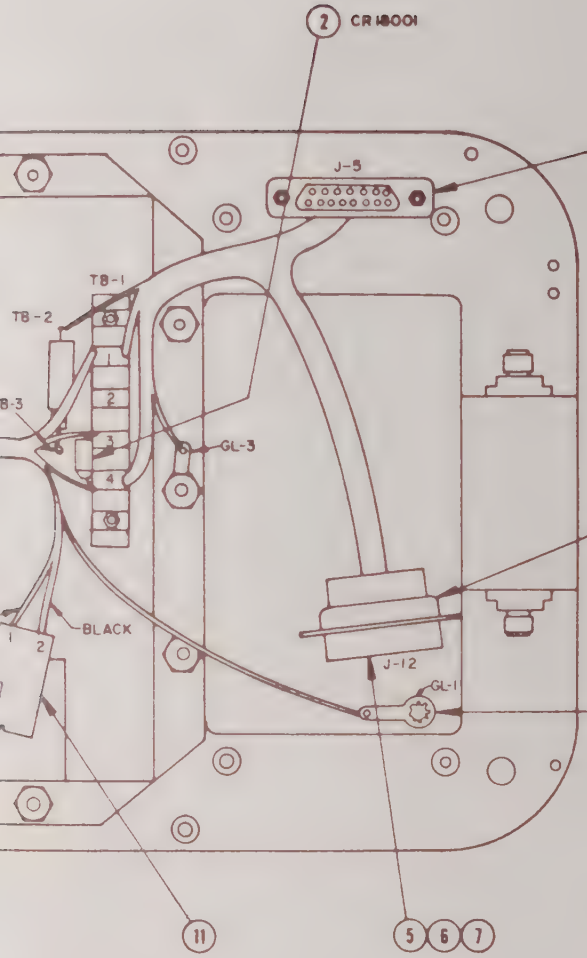

GND LUG AS SHOWN AND DISCARD SCREW END. REMOVE SCREW FROM BACK OF FAN.
CE SOLDER CONNECTION END OF GROUND LUG ON EW. REASSEMBLE SCREW AND SOLDER CONNECTION OF GROUND LUG ON FAN.

EMBLE FUSE INTO HOLDER BEFORE LYING TUBING. ASSEMBLE ITEM 12 UND HOLDER, BETWEEN BODY AND I. BEND OVER EXTRA LENGTH OF M 12 AND ASSEMBLE ITEM 13 OVER.

ITEM	REQ'D	PART NO.	DESCRIPTION
13	3	FIT-221-3/4	"ALPHA"/EQUIV HEAT SHRINK TUBING, 3/4" LG
12	3	FIT-221-3/8	"ALPHA"/EQUIV HEAT SHRINK TUBING, 2½" LONG
11	1	03-09-1022	"MOLEX"/EQUIV CONN. HSG
10	1	1411-4	GROUND LUG
9	1	UK50-103	"CENTRALAB"/EQUIV DISC CAP
8	1	1025-52	"DELEVAN"/EQUIV 22 μH CHOKE
7	1	205980-1	"AMP"/EQUIV MALE SCREW RETAINER KIT
6	15	205201-5	"AMP"/EQUIV FEMALE CRIMP SOCKET
5	1	205205-1	"AMP"/EQUIV 15 POSITION FEMALE CONNECTOR
4	2	DD103	"CENTRALAB"/EQUIV DISC CAP .01μf, 1KV, ± 20%
3	2	RC32GFR10K	"ALLEN-BRADLEY"/EQUIV RES. 1MΩ, 0.1w, 10%
2	1	NS-2001	"SOLITRON"/EQUIV DIODE
1	1	3-23-0380	REAR PANEL WIRING ASSEMBLY

LIST OF MATERIALS

NEXT ASSY	QTY	MODEL
23-0582	1	

APPLICATION

TOLERANCES
UNLESS OTHERWISE SPECIFIED
ALL DIMENSIONS APPLY AFTER FINISH
DECIMALS ± .010 .XXX ± .005
ANGLES ± 1/2°
FRACTIONS ± 1/64
SURFACE ROUGHNESS 125 ✓
REMOVE ALL BURRS

DRAWN Ten Eyck 5-24-78
CHECKED [illegible] 5/25/78
APPROVED [illegible] 6/2

MATERIAL
FINISH

- IFR INC -
WICHITA, KANSAS

TITLE
REAR PANEL
WIRING ASSEMBLY

SIZE C | PART NUMBER 3-23-0380 | REV R

SCALE 1" = 1" | WEIGHT

SHEET 2 OF 3

Figure 6-5

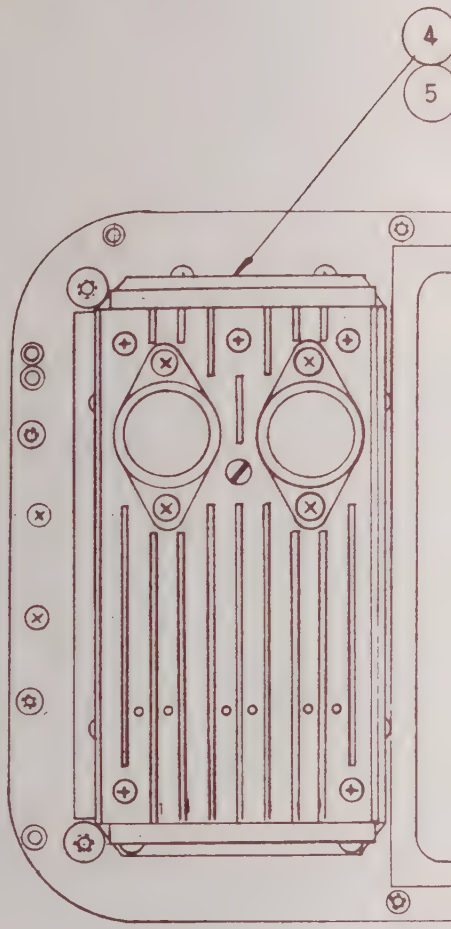
4
5

DATE	REV	CHANGE	APP'D
	-	SEE SHT 1 OF 3	

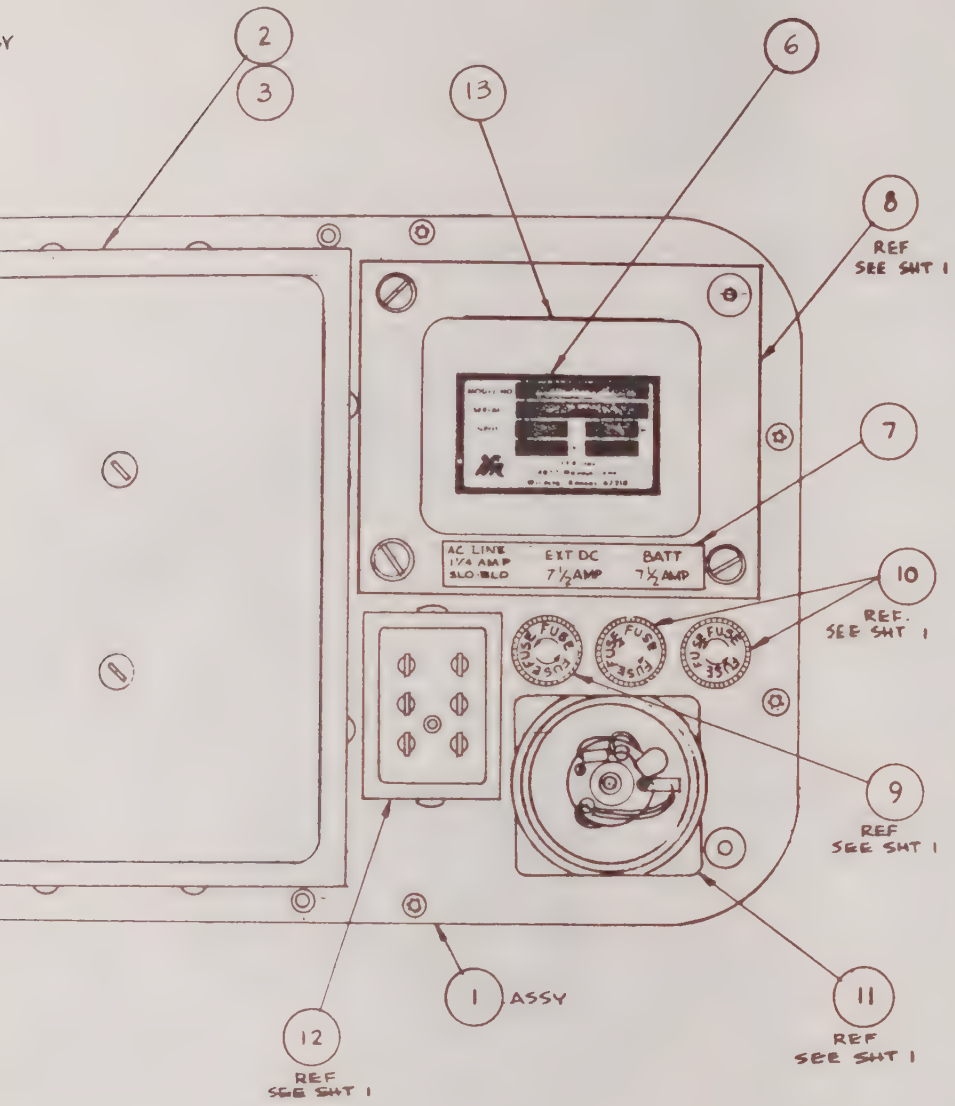

ITEM	REQ'D	PART NO.	DESCRIPTION
13	1	75-0023	FCC REGULATION TAG
12	1	P2416-AB	"CINCH"/EQUIV MALE AC PLUG
11	1	00-0154	FAN HOUSING
10	2	AGC-7½	"BUSS"/EQUIV FUSE, 7½A SLO BLO
9	1	MDL-1.25	"BUSS"/EQUIV FUSE, 1¼A SLO BLO
8	1	76-0182	"NATIONAL"/EQUIV KFMR
7	1	23-0385	FUSE LABEL
6	1	75-0022	SERIAL Nº TAG
5	4	#6-32x¼	PBHMS
4	1	23-0384	DUTY CYCLE REG. ASSY
3	2	76-0179	MOD. ROUND HEAD BOLT
2	1	23-0076	BATTERY CASE COVER
1	1	23-0380	REAR PANEL ASSY

NEXT ASSY	QTY	MODEL
23-0380	1	FM/AM 1000A

APPLICATION — LIST OF MATERIALS

TOLERANCES
UNLESS OTHERWISE SPECIFIED
ALL DIMENSIONS APPLY AFTER FINISH
DECIMALS .XX ± .010 .XXX ± .005
ANGLES ± 1/2°
FRACTIONS ± 1/64
SURFACE ROUGHNESS 125 ✓
REMOVE ALL BURRS

	DATE
DRAWN Simmons	12-17-75
CHECKED SSD	12-22-75
APPROVED MAJ	12/31/75

MATERIAL SEE LIST OF MATERIALS
TREATMENT —
FINISH —

INSTRUMENT FLIGHT RESEARCH CORPORATION
WICHITA, KANSAS

TITLE
REAR PANEL ASSEMBLY
VIEWED FROM OUTSIDE
FM/AM - 1000 A

SIZE	PART NUMBER	REV
C	3-23-0380	R

SCALE FULL — WEIGHT ——— — SHEET 3 OF 3

Figure 6-6

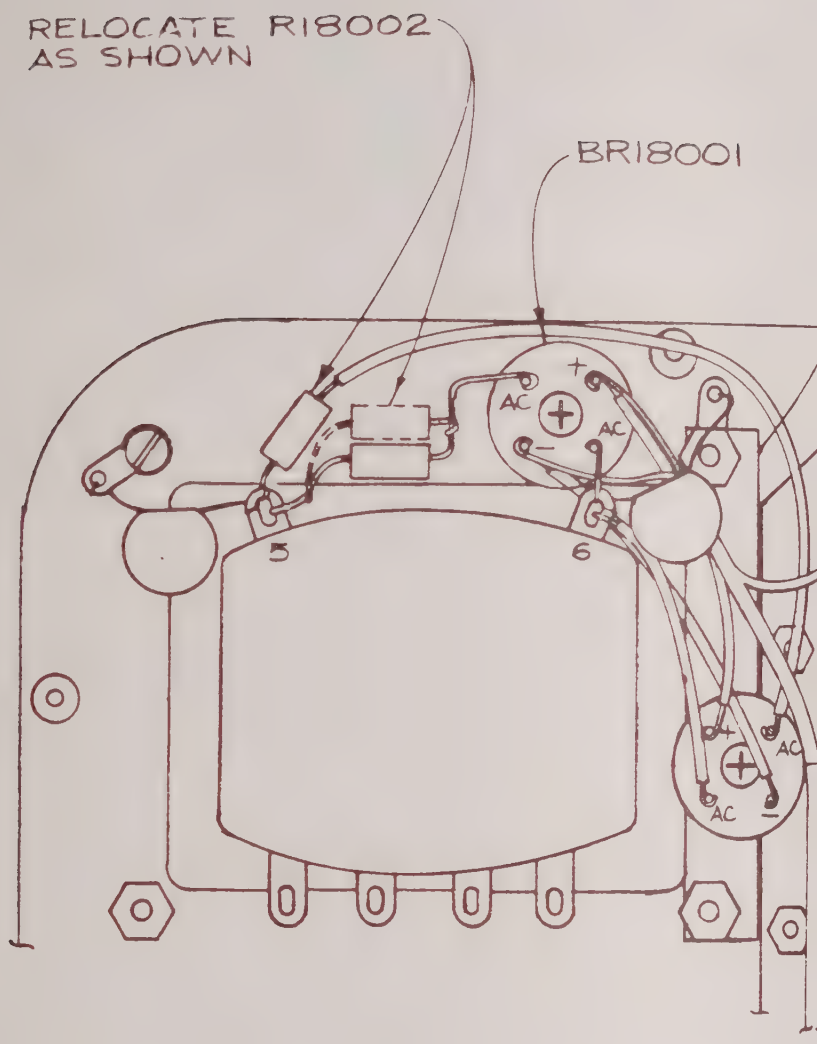

NOTES:

1. SLEEVE ALL LEADS
2. ON BRI8002, WIRE ALL DC TERMINALS AND ONE AC TERMINAL IN PARALLEL WITH BRI8001. REMAINING AC TERMINAL TO BE WIRED THRU RI8002 AS SHOWN.

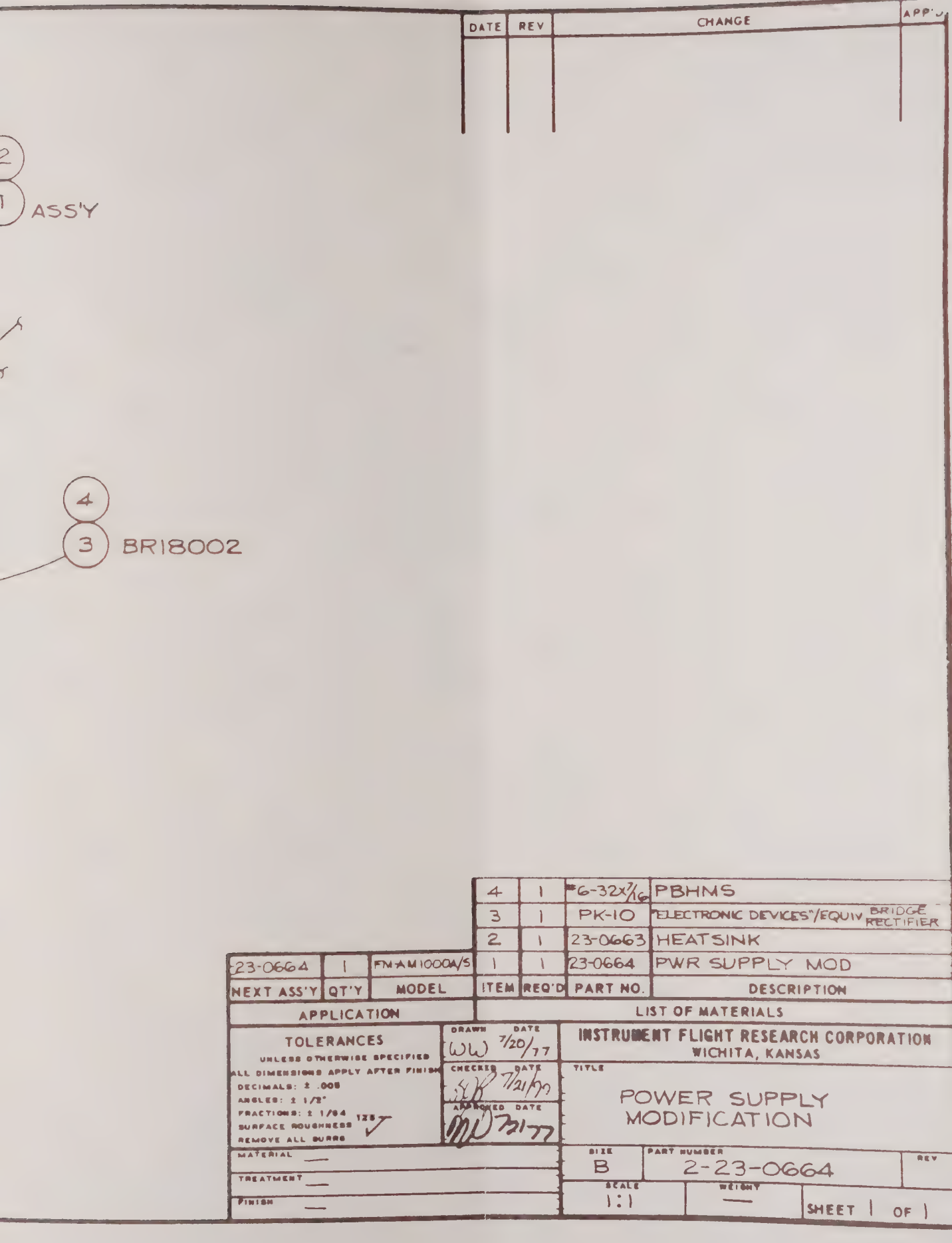
DATE
REV
CHANGE
APP'D
2
1
ASS'Y
4
3
BR18002
4 1 #6-32x7/16 PBHMS
3 1 PK-10 "ELECTRONIC DEVICES"/EQUIV BRIDGE RECTIFIER
2 1 23-0663 HEATSINK
23-0664 1 FM-AM1000A/S 1 1 23-0664 PWR SUPPLY MOD
NEXT ASS'Y QT'Y MODEL ITEM REQ'D PART NO. DESCRIPTION
APPLICATION
LIST OF MATERIALS
TOLERANCES
UNLESS OTHERWISE SPECIFIED
ALL DIMENSIONS APPLY AFTER FINISH
DECIMALS: ± .005
ANGLES: ± 1/2°
FRACTIONS: ± 1/64
SURFACE ROUGHNESS 125
REMOVE ALL BURRS
DRAWN WW DATE 7/20/77
CHECKED DATE 7/21/77
APPROVED DATE 7/21/77
INSTRUMENT FLIGHT RESEARCH CORPORATION
WICHITA, KANSAS
TITLE
POWER SUPPLY MODIFICATION
MATERIAL —
TREATMENT —
FINISH —
SIZE B
PART NUMBER 2-23-0664
REV
SCALE 1:1
WEIGHT —
SHEET 1 OF 1

Figure 6-5

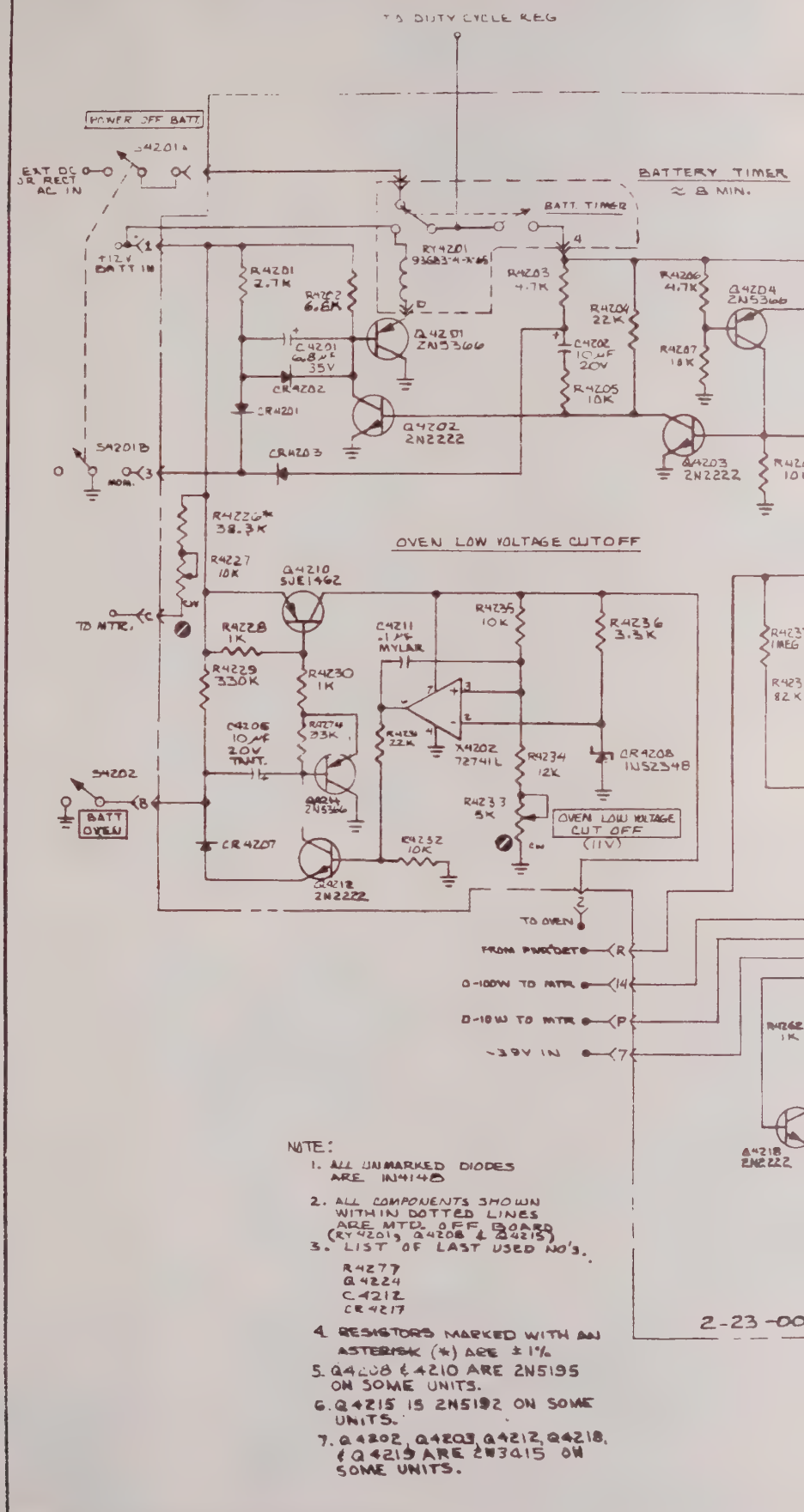
TO DUTY CYCLE REG
POWER OFF BATT
S4201A
EXT DC OR RECT AC IN
BATTERY TIMER
≈ 8 MIN.
BATT TIMER
+12 V BATT IN
R4201 2.7K
R4202 6.8K
RY4201 93683-4-X-05
R4203 4.7K
R4204 22K
R4205 10K
R4206 4.7K
R4207 18K
C4201 680 µF 35V
C4202 10 µF 20V
CR4202
CR4201
CR4203
Q4201 2N3366
Q4202 2N2222
Q4203 2N2222
Q4204 2N5366
S4201B
MOM.
OVEN LOW VOLTAGE CUTOFF
R4226* 38.3K
R4227 10K
R4228 1K
R4229 330K
R4230 1K
Q4210 SUE1462
C4211 .1 µF MYLAR
R4235 10K
R4236 3.3K
C4206 10 µF 20V TANT.
R4234 12K
X4202 72741L
CR4208 1N5234B
R4233 5K
OVEN LOW VOLTAGE CUT OFF (11V)
S4202
BATT OVEN
CR4207
R4232 10K
Q4212 2N2222
TO MTR.
TO OVEN
FROM PWR DET
0-100W TO MTR
0-10W TO MTR
-39V IN
Q4218 2N2222
2-23-00
NOTE:
1. ALL UNMARKED DIODES ARE IN4148
2. ALL COMPONENTS SHOWN WITHIN DOTTED LINES ARE MTD. OFF BOARD (RY4201, Q4208 & Q4215)
3. LIST OF LAST USED NO'S.
R4277
Q4224
C4212
CR4217
4. RESISTORS MARKED WITH AN ASTERISK (*) ARE ± 1%
5. Q4208 & Q4210 ARE 2N5195 ON SOME UNITS.
6. Q4215 IS 2N5192 ON SOME UNITS.
7. Q4202, Q4203, Q4212, Q4218, & Q4219 ARE 2N3415 ON SOME UNITS.

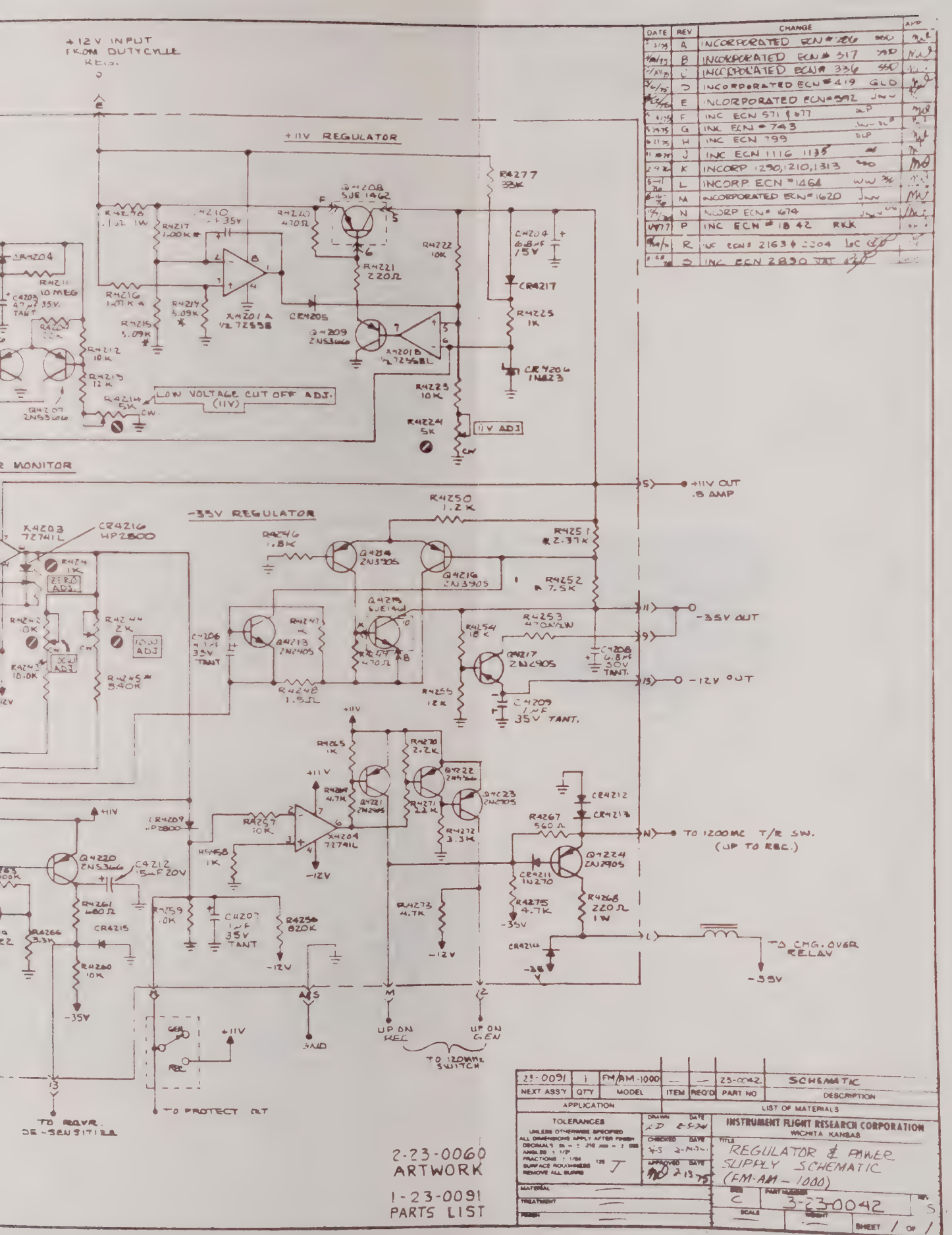
+12V INPUT FROM DUTY CYCLE REG.
+11V REGULATOR
-35V REGULATOR
LOW VOLTAGE CUT OFF ADJ. (11V)
11V ADJ
+11V OUT .8 AMP
-35V OUT
-12V OUT
TO 1200MC T/R SW. (UP TO REC.)
TO CMG. OVER RELAY
TO RQVR. DE-SENSITIZE
TO PROTECT CKT
UP ON REC
UP ON GEN
TO 12 WAY SWITCH
GND
2-23-0060 ARTWORK
1-23-0091 PARTS LIST
SCHEMATIC
REGULATOR & POWER SUPPLY SCHEMATIC (FM-AM-1000)
INSTRUMENT FLIGHT RESEARCH CORPORATION WICHITA KANSAS
3-23-0042

Figure 6-9

NOTES:

1. ALL RESISTORS ARE 1/4 W., 10% TOLERANCE EXCEPT AS NOTED.
2. ALL CAPACITOR VALUES ARE IN μF EXCEPT AS NOTED.
3. COMPONENT LEADS MAY EXTEND .04 TO .08 BEYOND BOTTOM OF BOARD AFTER SOLDERING.
4. MAXIMUM HEIGHT OF COMPONENTS TO BE .35 FROM COMPONENT SIDE OF BOARD.
5.
6. * NOTES 1% 1/4W RES.

▷ R56 IS MTD ON BACK SIDE AS SHOWN IN BOTTOM VIEW ONLY ON "E" REV. ARTWORK. FOR "F" REV IT WILL LOCATE AS IN THE LARGER VIEWS.

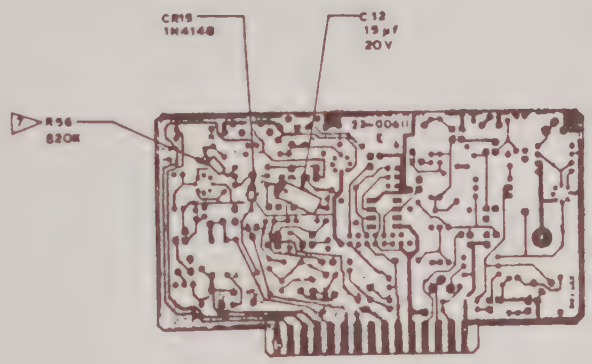

BOTTOM VIEW

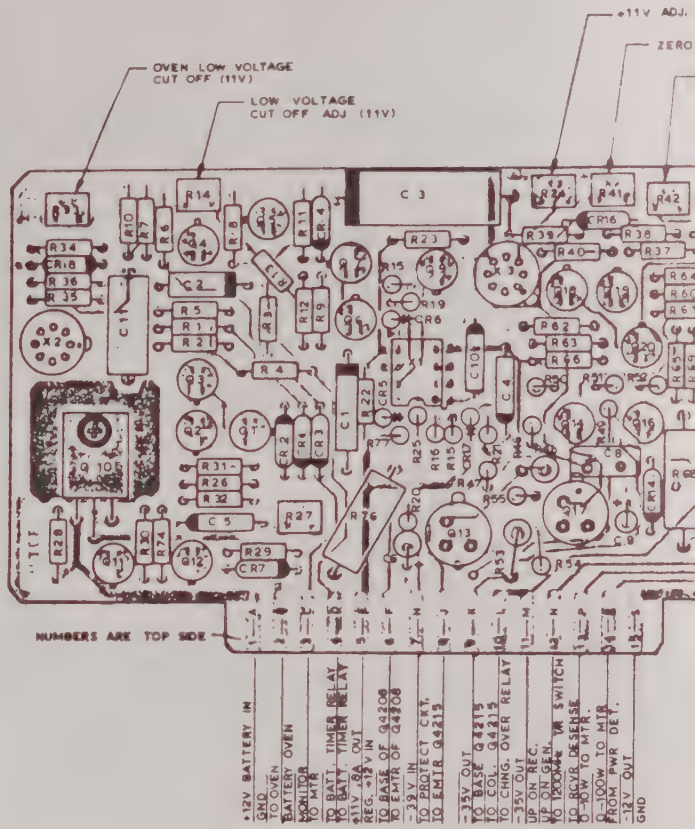

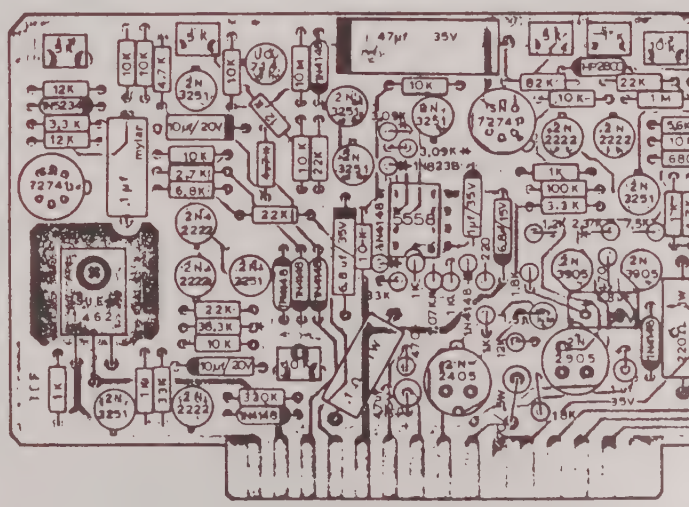

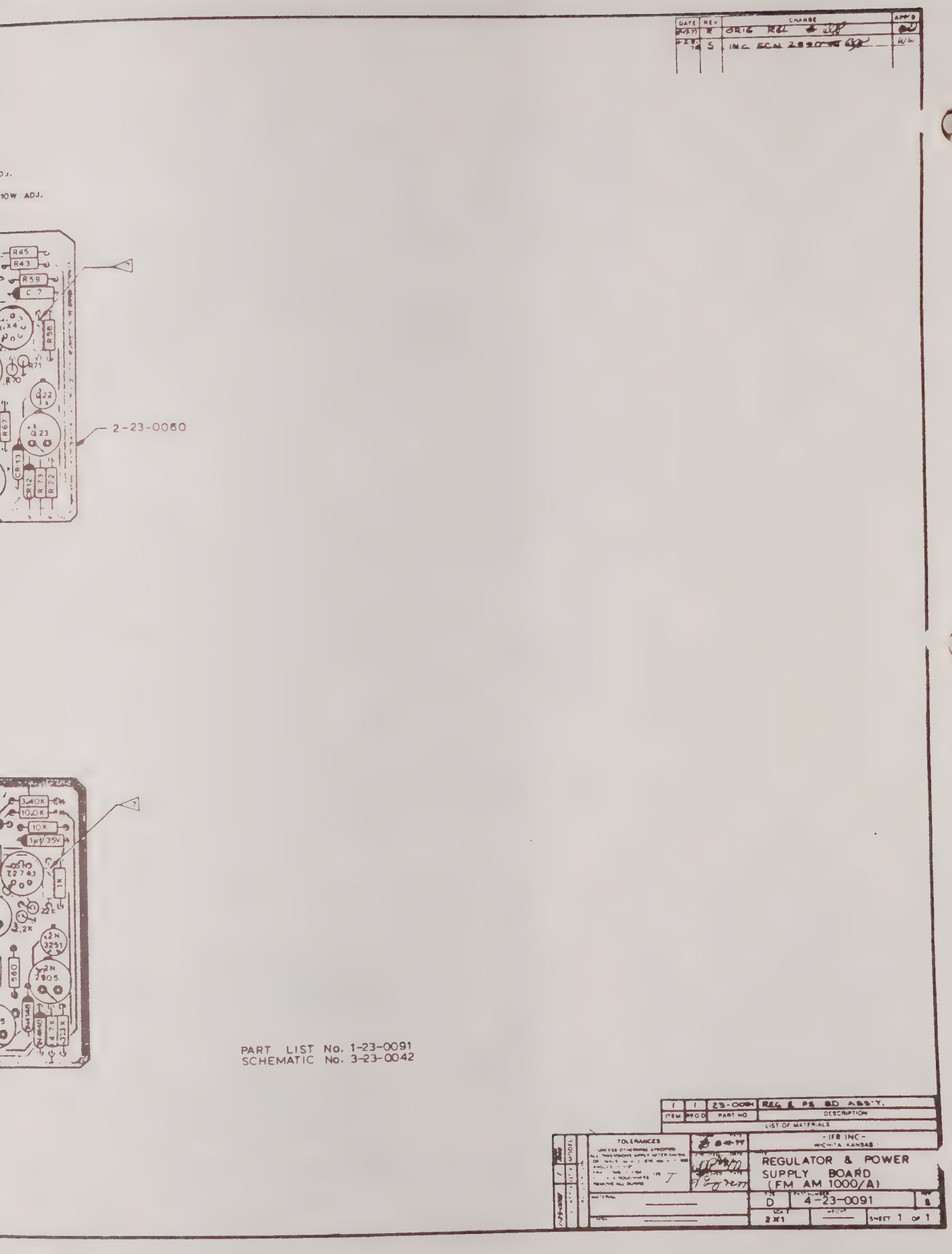

DATE
REV
CHANGE
APP'D
R
ORIG REL
S
INC ECN 2890
R45
R43
R59
C 7
R56
R71
R70
Q22
Q23
R67
CR13
CR12
R73
R72
2-23-0060
3.40K
10.0K
10K
1µf 35V
1K
2N 3251
2N 2905
560
PART LIST No. 1-23-0091
SCHEMATIC No. 3-23-0042
1
1
23-0091
REG & PS BD ASS'Y.
ITEM
REQ'D
PART NO
DESCRIPTION
LIST OF MATERIALS
TOLERANCES
- IFR INC -
WICHITA KANSAS
REGULATOR & POWER
SUPPLY BOARD
(FM AM 1000/A)
D
4-23-0091
2X1
SHEET 1 OF 1

Figure 6-10

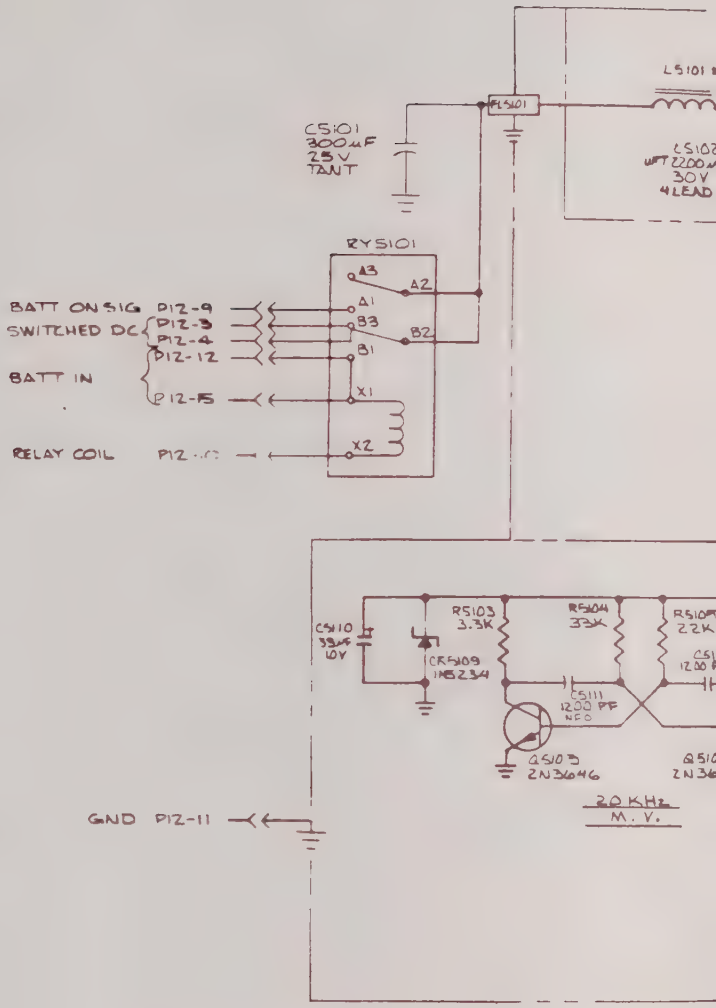
CS101
300μF
25V
TANT
RY5101
A3
A2
A1
B3
B2
B1
X1
X2
BATT ON SIG P12-9
SWITCHED DC P12-3
P12-4
P12-12
BATT IN
P12-15
RELAY COIL
GND P12-11
CS110
33μF
10V
R5103
3.3K
CR5109
1N5234
R5104
33K
CS111
1200 PF
NPO
Q5103
2N3646
20 KHz
M.V.

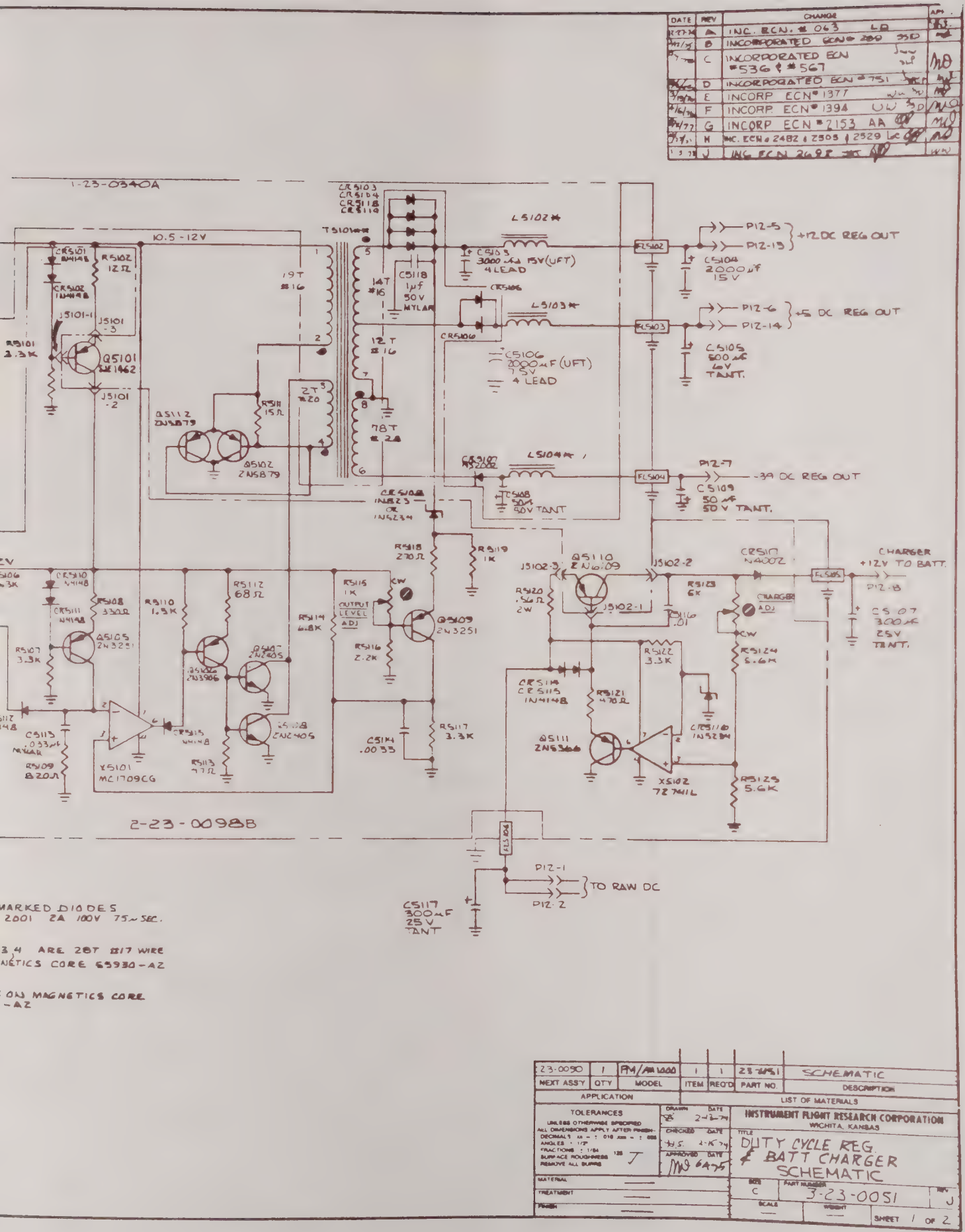

DATE
REV
CHANGE
A INC. ECN. # 063 LD
B INCORPORATED ECN # 280 SSD
C INCORPORATED ECN #536 & #567
D INCORPORATED ECN # 751
E INCORP ECN # 1377
F INCORP ECN # 1394 UW SD
G INCORP ECN # 2153 AA
H INC. ECN # 2482 & 2505 & 2529 LC
J INC ECN 2698
1-23-0340A
10.5-12V
CR5101 1N4148
CR5102 1N4148
R5102 12Ω
J5101-1
J5101-3
J5101-2
R5101 3.3K
Q5101 SE1462
CR5103
CR5104
CR5118
CR5119
T5101
19T #16
14T #16
12T #16
2T #20
78T #28
C5118 1μf 50V MYLAR
L5102
L5103
L5104
C5103 3000μf 15V (UFT) 4 LEAD
C5106 2000μF (UFT) 7.5V 4 LEAD
CR5106
CR5107
C5108 50μf 50V TANT
FL5102
FL5103
FL5104
FL5105
P12-5
P12-13
+12 DC REG OUT
C5104 2000μf 15V
P12-6
P12-14
+5 DC REG OUT
C5105 500μf 6V TANT.
P12-7
-39 DC REG OUT
C5109 50μf 50V TANT.
Q5112 2N5879
Q5102 2N5879
R5111 15Ω
CR5108 1N823 OR 1N5234
R5118 270Ω
R5119 1K
Q5110 2N6109
J5102-3
J5102-2
J5102-1
R5120 .56Ω 2W
R5123 6K
C5116 .01
CR5117 N4002
CHARGER ADJ
CHARGER +12V TO BATT.
P12-8
C5107 300μf 25V TANT.
R5122 3.3K
R5124 5.6K
CR5114 CR5115 1N4148
R5121 470Ω
Q5111 2N5366
CR5116 1N5234
X5102 72741L
R5125 5.6K
R5110 1.5K
R5112 68Ω
R5115 1K
OUTPUT LEVEL ADJ
CW
R5114 6.8K
Q5109 2N3251
R5116 2.2K
C5114 .0033
R5117 3.3K
R5108 330Ω
Q5105 2N3251
R5107 3.3K
Q5106 2N3906
Q5107 2N2405
Q5108 2N2405
CR5115 N4148
R5113 47Ω
C5113 .033μf MYLAR
R5109 820Ω
X5101 MC1709CG
2-23-0098B
FL5106
P12-1
P12-2
TO RAW DC
C5117 300μF 25V TANT
MARKED DIODES
2001 2A 100V 75~SEC.
3,4 ARE 28T #17 WIRE
NETICS CORE 65930-A2
ON MAGNETICS CORE
-A2
23-0090 | 1 | PM/AM1000 | 1 | 1 | 23-0051 | SCHEMATIC
NEXT ASS'Y | QTY | MODEL | ITEM | REQ'D | PART NO. | DESCRIPTION
APPLICATION
LIST OF MATERIALS
TOLERANCES
UNLESS OTHERWISE SPECIFIED
ALL DIMENSIONS APPLY AFTER FINISH
DECIMALS .XX = ± .010 .XXX = ± .005
ANGLES ± 1/2°
FRACTIONS ± 1/64
SURFACE ROUGHNESS 125
REMOVE ALL BURRS
DRAWN DATE 2-13-74
CHECKED DATE 2-15-74
APPROVED DATE 6-4-75
INSTRUMENT FLIGHT RESEARCH CORPORATION
WICHITA, KANSAS
TITLE
DUTY CYCLE REG. & BATT CHARGER SCHEMATIC
MATERIAL
TREATMENT
FINISH
SIZE C
PART NUMBER 3-23-0051
REV J
SCALE
WEIGHT
SHEET 1 OF 2

Figure 6-11

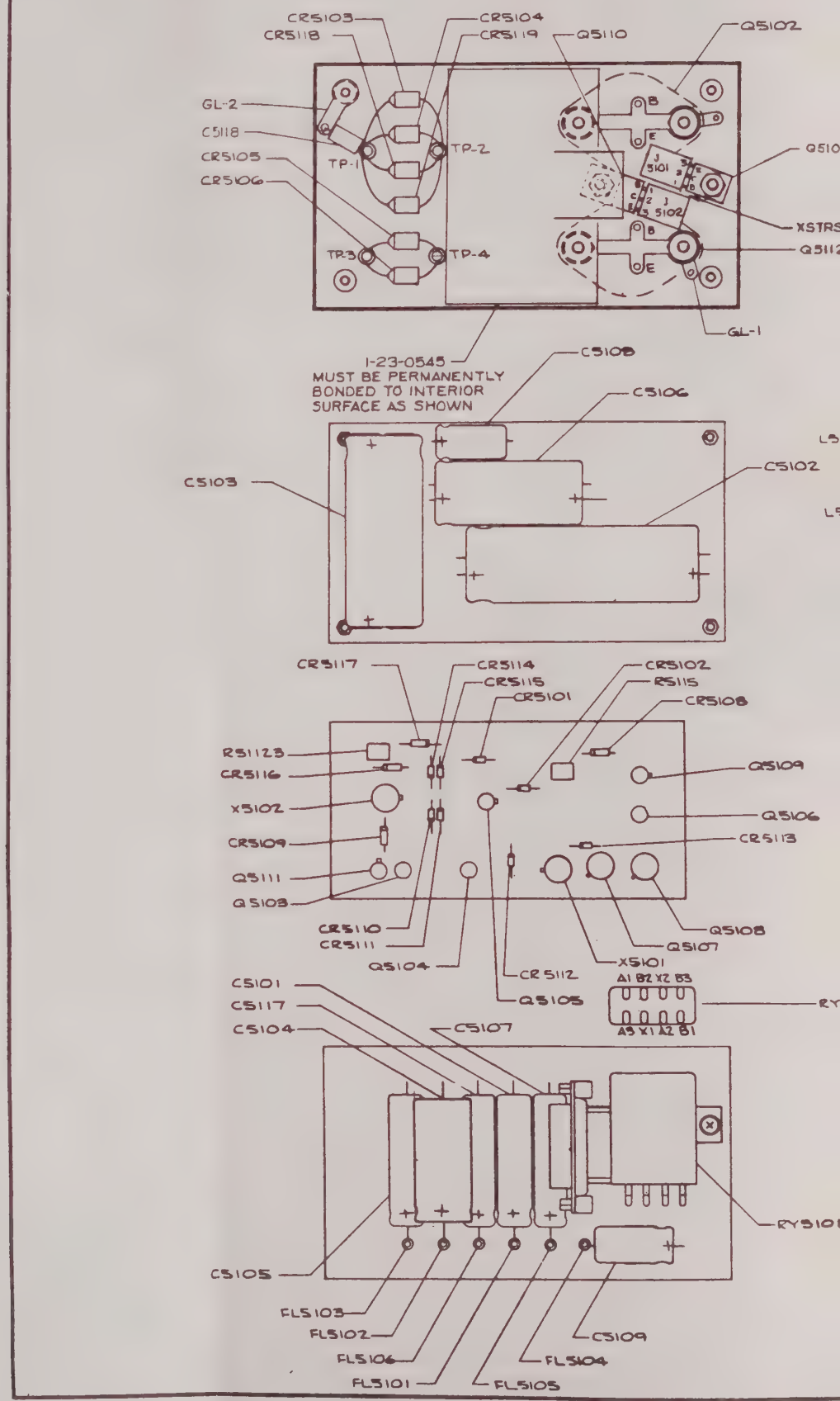
CR5103
CR5104
CR5118
CR5119
Q5110
Q5102
GL-2
C5118
CR5105
CR5106
TP-1
TP-2
TP-3
TP-4
XSTRS
GL-1
1-23-0545
MUST BE PERMANENTLY
BONDED TO INTERIOR
SURFACE AS SHOWN
C5108
C5106
C5103
C5102
CR5117
CR5114
CR5115
CR5101
CR5102
R5115
CR5108
R5112B
CR5116
X5102
CR5109
Q5111
Q5103
Q5109
Q5106
CR5113
CR5110
CR5111
Q5104
CR5112
Q5105
Q5108
Q5107
X5101
A1 B2 X2 B3
A3 X1 A2 B1
C5101
C5117
C5104
C5107
C5105
FL5103
FL5102
FL5106
FL5101
FL5105
FL5104
C5109

DATE	REV	CHANGE	APP'D
		SEE SHT 1 OF 2	

DETAIL VIEW J5101 & J5102

BE PARALLEL HERE

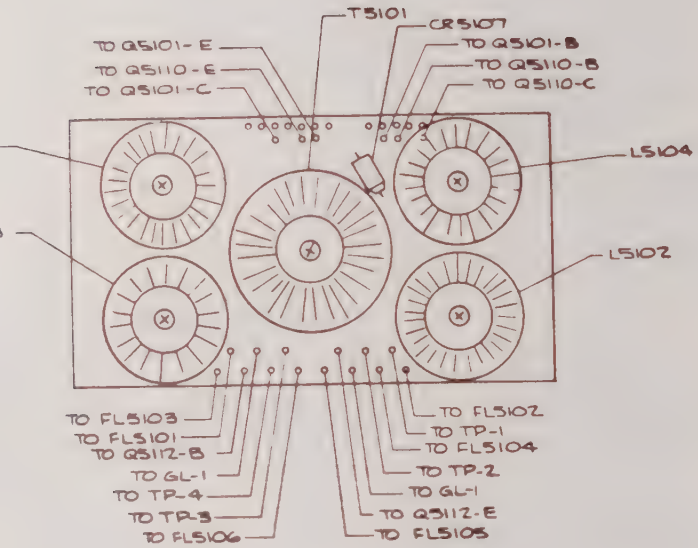

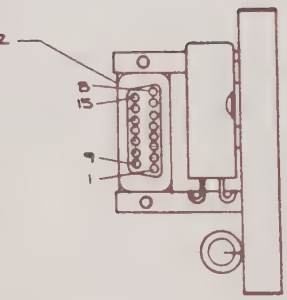

23-0050	1	FM/AM-1000	1	1	23-0051	DUTY CYCLE REGULATOR
NEXT ASSY	QTY	MODEL	ITEM	REQ'D	PART NO.	DESCRIPTION

APPLICATION — LIST OF MATERIALS

TOLERANCES
UNLESS OTHERWISE SPECIFIED
ALL DIMENSIONS APPLY AFTER FINISH
DECIMALS .XX = ± .010 .XXX = ± .005
ANGLES ± 1/2°
FRACTIONS ± 1/64
SURFACE ROUGHNESS 125 7
REMOVE ALL BURRS

DRAWN JNV 4 B-75
CHECKED RR 4-9-75
APPROVED MD 6 9 75
MATERIAL
TREATMENT
FINISH

INSTRUMENT FLIGHT RESEARCH CORPORATION
WICHITA, KANSAS

TITLE: DUTY CYCLE REGULATOR AND BATT. CHARGER LAYOUT FM/AM-1000

SIZE C | FSCM NO. | 3-23-0051 | REV J

SCALE 1:1 | WEIGHT — | SHEET 2 OF 2

Figure 6-12

1. INSTALL BUSS WIRES W/SLEEVING ON RELAY 51
2. USING AMP TOOL #90265-1, CRIMP PINS ITEM 5
3. INSTALL & SOLDER WIRES 25 & 26 FROM FL5101
4. CONNECT & SOLDER REMAINING WIRES FROM

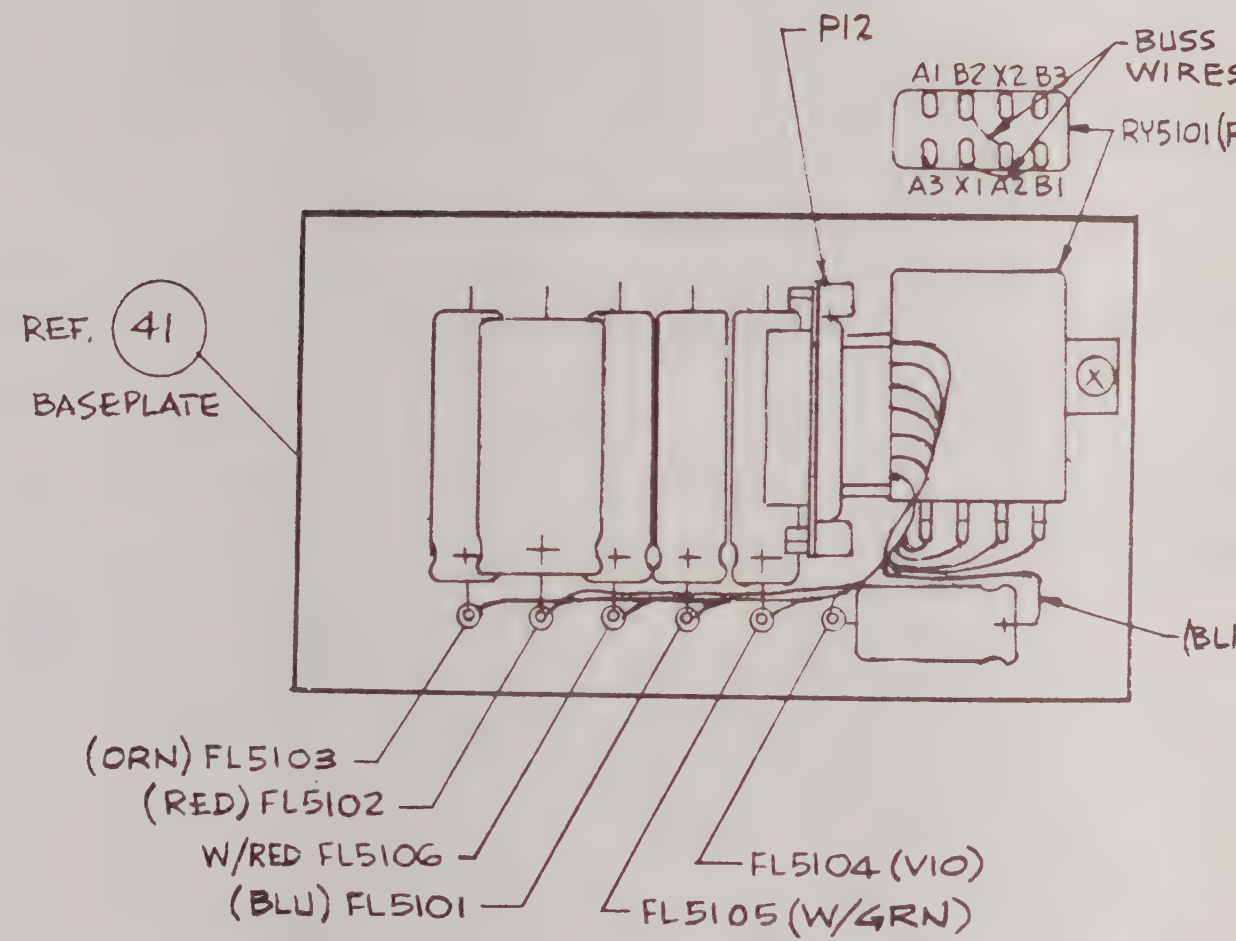

REF DWG: I
4-23-

DATE	REV	CHANGE	APP'D
7/27/n	D	INCORP. ECN # 2505 LC	

				DATE	REV	CHANGE	APP'D
4-6-76	B	INCORP ECN# 1394 UU SDD		3-19-76	A	INCORP ECN# 1377 WW	
4-JAN-77	C	GEN CORRECTION & UPDATE JNJ WW					

TO 15 WIRES & INSTALL IN P12.

TO RELAY & SOLDER.

12 PER WIRING LIST.

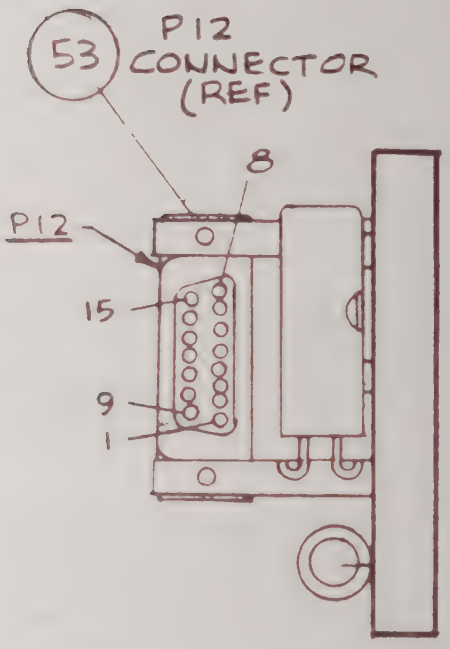

WIRING LIST (REF)

	WIRE NO.	FROM	TO	COLOR	GA	LGTH
	24	RY5101 -B1	RY5101 -X1	BUSS	22	
	25	RY5101 -B2	FL5101	BLUE	22	
	26	RY5101 -B2	FL5101	BLUE	22	
*	27	P12-1	FL5106	W/RED	22	
*	28	P12-2	FL5106	W/RED	22	
*	29	P12-3	RY5101 -B3	BLUE	22	
*	30	P12-4	RY5101 -B3	BLUE	22	
*	31	P12-5	FL5102	RED	22	
*	32	P12-6	FL5103	ORN	22	
*	33	P12-7	FL5104	PURPLE	22	
*	34	P12-8	FL5105	W/GRN	22	
*	35	P12-9	RY5101 -A1	GREEN	22	
*	36	P12-10	RY5101 -X2	WHITE	22	
*	37	P12-11	BASE PLATE GND	BLACK	22	
*	38	P12-12	RY5101 -B1	W/GRN	22	
*	39	P12-13	FL5102	RED	22	
*	40	P12-14	FL5103	ORN	22	
*	41	P12-15	RY5101 -B1	W/GRN	22	
	42	RY5101 -B2	-A2	BUSS	22	

LUST.

84

NEXT ASS'Y	QT'Y	MODEL	ITEM	REQ'D	PART NO.	DESCRIPTION
23-0050	—	FM/AM-1000	1	1	23-0051	DUTY CYCLE REGULATOR

APPLICATION

LIST OF MATERIALS

TOLERANCES
UNLESS OTHERWISE SPECIFIED
ALL DIMENSIONS APPLY AFTER FINISH
DECIMALS: ± .000
ANGLES: ± 1/2°
FRACTIONS: ± 1/64
SURFACE ROUGHNESS 125 ✓
REMOVE ALL BURRS

DRAWN SIMMONS DATE 10/21/75
CHECKED BCA DATE 10/28/75
APPROVED DATE 11-5-75

MATERIAL —
TREATMENT —
FINISH —

INSTRUMENT FLIGHT RESEARCH CORPORATION
WICHITA, KANSAS

TITLE
DUTY CYCLE REGULATOR
& BATT CHARGER WIRING
FM/AM 1000

SIZE	PART NUMBER	REV
B	2-23-0459	D

SCALE	WEIGHT	SHEET 1 OF 4
1/1	—	

Figure 6-13

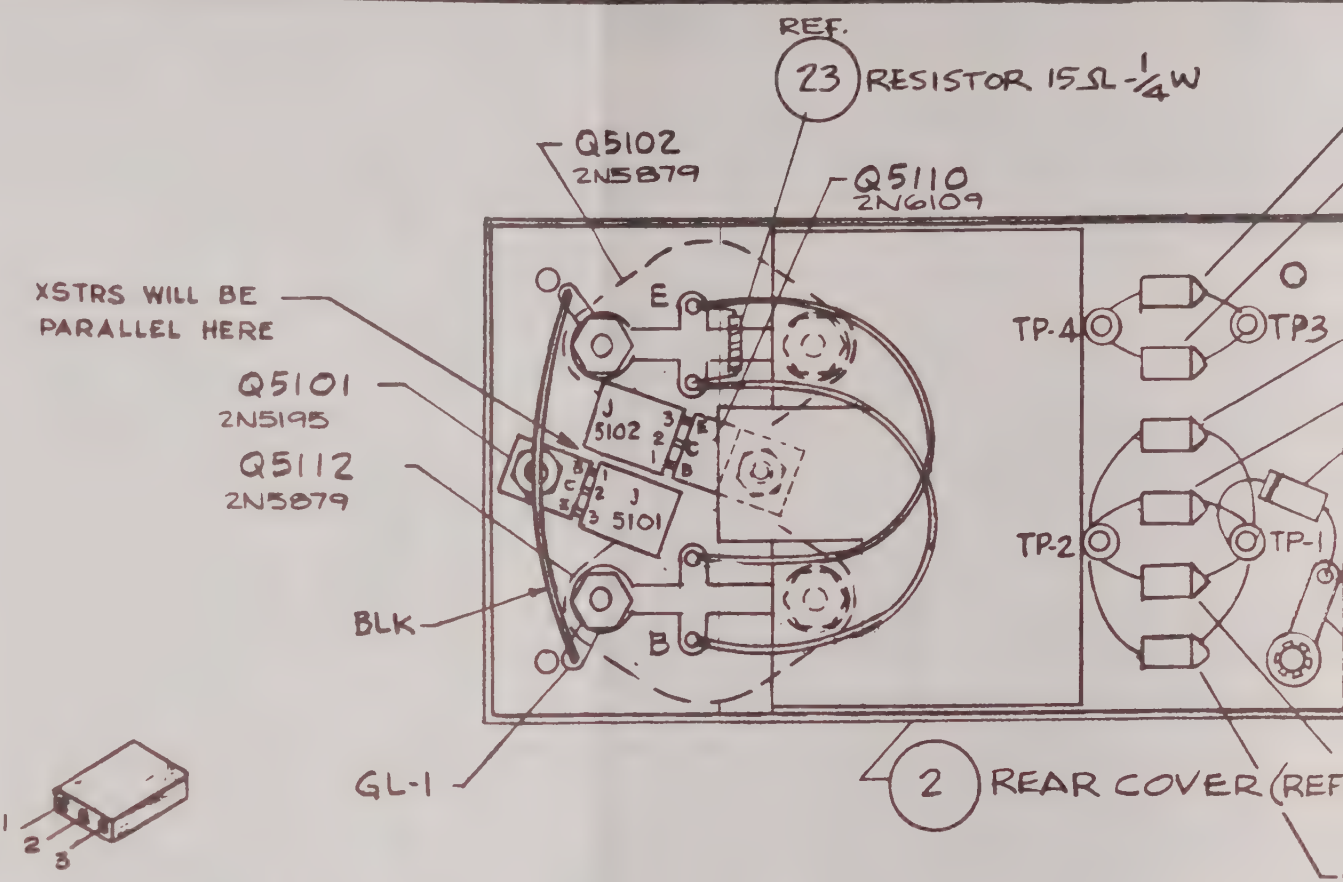

DETAIL VIEW J5101 & J5102

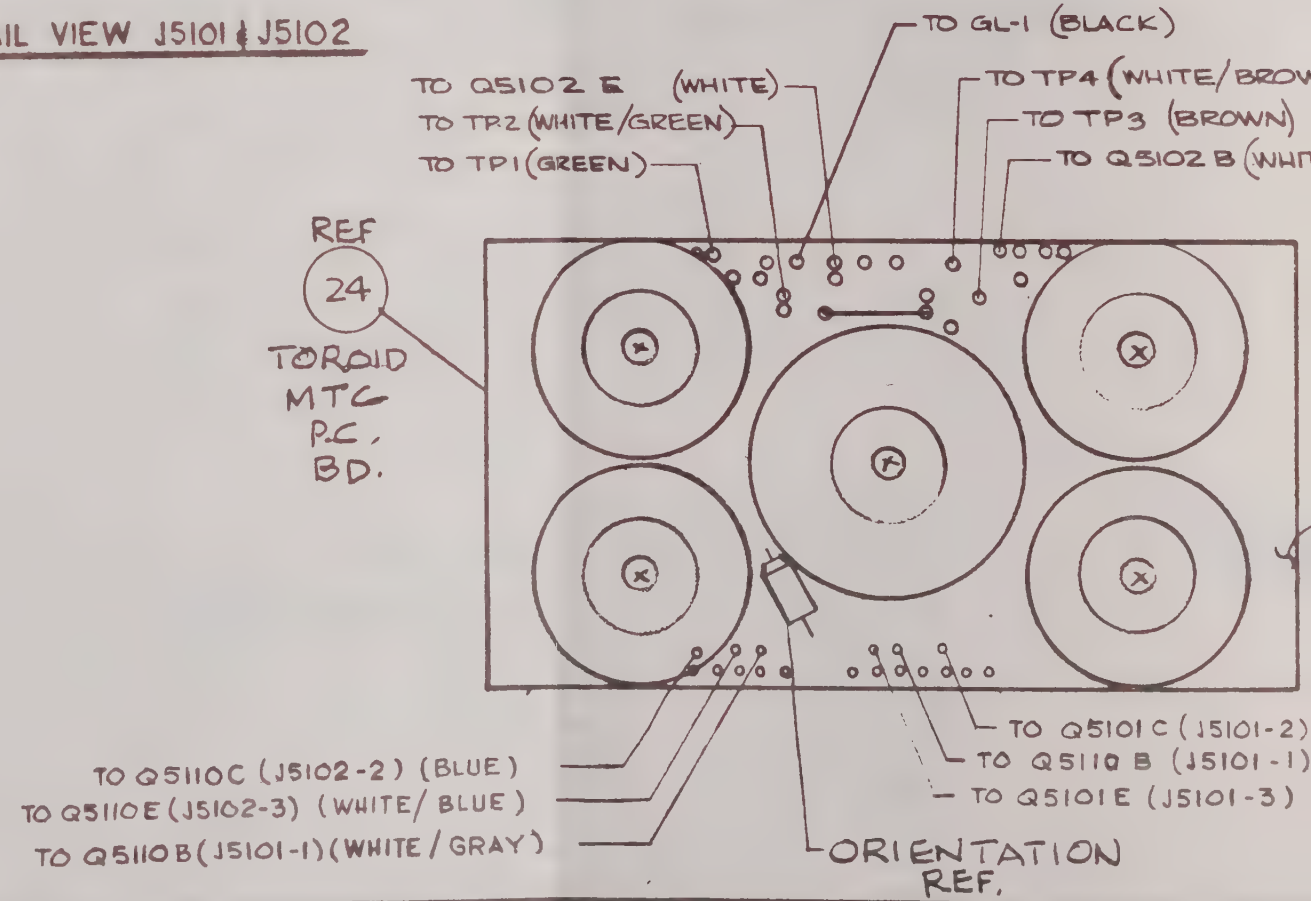

DATE	REV	CHANGE	APP'D
		— SEE SHT 1 OF 4 —	

R5106 (NS-2001 DIODE (G) PL)
R5105

CR5119
CR5118
5118

WIRING LIST (REF)

ITEM	FROM	TO	COLOR	GA.	LENGTH
1	Q5102-E	Q5102-B	15Ω 1/4W	RES	
2	Q5112-E	Q5102-E	WHITE	22	
3	Q5112-B	Q5102-B	ORN/W	22	
4	TOROID MTG BD	Q5102-E	WHITE	22	
6	TOROID MTG BD.	TP-1	GREEN	22	
7	TOROID MTG BD.	TP-2	GRN/W	22	
8	TOROID MTG BD	TP-3	BROWN	22	
9	TOROID MTG BD	TP-4	W/BRN	22	
10	TOROID MTG BD	J5101-2 Q5101-C	W/VIO	22	
11	TOROID MTG BD	J5101-3 Q5101-E	W/BRN	22	
12	TOROID MTG BD	J5101-1 Q5101-B	W/GRAY	22	
13	TOROID MTG BD	J5102-1 Q5110-B	W/GRN	22	
14	TOROID MTG BD.	J5102-3 Q5110-E	W/BLUE	22	
15	TOROID MTG BD	J5102-2 Q5110-C	BLUE	22	
16	TOROID MTG BD	GL-1	BLACK	22	

NOTE:
SOLDER ONE END OF WIRES TO TOROID MTG. PC BOARD & SOLDER OTHER END TO COMPONENTS OF REAR COVER PER WIRING LIST.
(NOTE ORIENTATION REF)

CR5104
03
RN)
TTOM
TE/VIO)
TE/GRN)
TE/BRN)

NEXT ASS'Y	QT'Y	MODEL	ITEM	REQ'D	PART NO.	DESCRIPTION
23-0050		FM/AM-1000			23-0051	DUTY CYCLE REGULATOR

APPLICATION | LIST OF MATERIALS

TOLERANCES
UNLESS OTHERWISE SPECIFIED
ALL DIMENSIONS APPLY AFTER FINISH
DECIMALS: ± .000
ANGLES: ± 1/2°
FRACTIONS: ± 1/64
SURFACE ROUGHNESS 125 ✓
REMOVE ALL BURRS

MATERIAL
TREATMENT
FINISH

DRAWN SIMMONS DATE 10/15/75
CHECKED BC DATE 10/28/75
APPROVED DATE 11-5-75

INSTRUMENT FLIGHT RESEARCH CORPORATION
WICHITA, KANSAS

TITLE
DUTY CYCLE REGULATOR & BATT. CHARGER WIRING FM/AM 1000

SIZE	PART NUMBER	REV
B	2-23-0459	D

SCALE	WEIGHT	
1/1		SHEET 4 OF 4

Figure 6-14

ITEM	REQD	PART NO	DESCRIPTION	
28				
29	6	4-40 x 3/8	PBHMS	
30	1	2-23-0374	P.C. BD MTG. BRKT	
31	4	#4-40 x 1/8	PHILLIPS BIND HD MACH. SCREW	
32	4	#2	INT. TOOTH LOCKWASHER	
33	4	#2-56 x 3/16	PHILLIPS BIND HD MACH SCREW	
34				
35	1	2-23-0373	P.C. BOARD MTG BRKT	
36				
37	1	1-23-0545	FLAT INSULATOR	
38	2	10 17 2032	"MOLEX"/EQUIV XSTR CONN	
39	6	08-50-0114	"MOLEX"/EQUIV CRIMP PIN	NOT SHOWN
40	1	FSN-32A-12	"ANSLEY"/EQUIV. FLEX STRIP	
41	1	2-23-0378	DUTY CYCLE REG. BASEPLATE	
42				
43	6	51-708-001	"SPECTRUM CONTROLS"/EQUIV FEEDTHRU FKT.	
44	1	99GB3-4-X-65	"ES"/EQUIV. RELAY	
45				
46	1	TC1520C	"TEMPLE"/EQUIV. ELECT CAP 2000µf 15V	
47	2	NLW-50-50	"CDE"/EQUIV. ELECT. CAP 50µf 50 V	
48	1	NLW-500-6	"CDE"/EQUIV. ELECT. CAP 500µf 6 V	
49	3	NLW-300-25	"CDE"/EQUIV. ELECT. CAP. 300µf 25 V	
50	2	1-76-0184	STANDOFF	
51	2	#4-40 x 1/4	PHILLIPS BIND HEAD MACH SCREW	
52				
53	1	205206-1	"AMP"/EQUIV. 15 POS. FEMALE CONN.	
54				
55	15	66506-9	"AMP"/EQUIV. MALE CRIMP PIN	
56	1	3-23-0377	SIDE COVER ASSY	
57				
58	1	1-23-0090	P.C. BOARD ASSY	
59	1	1-23-0340	TOROID MOUNTING P.C. BD.	
60	1	1-23-0296	XFMR MOUNTING HUB	
61				
62	1	1-76-0135	INVERTER XFMR	
63	5	#4	FLAT WASHER	
64	5	2-76-0002-16	FIBER WASHER	
65	4	1-23-0271	TOROID MOUNTING HUB	
66				
67	4	1-76-0162	TOROID	
68				
69	1	UFT-1004-4	"CORNELL-DUBILIER"/EQUIV 3000µf ELECT CAP. /5V	
70				
71	1	UFT-2000-7.5	2000µf 7.5 V ELECT CAP	
72	1	UFT-2200-30	2200µf 30V ELECT CAP	

DATE	REV	CHANGE	APP'D
[illegible]	H	INCORP ECN # 2505 LC [illegible]	[illegible]
[illegible]	J	INC ECN [illegible]	[illegible]

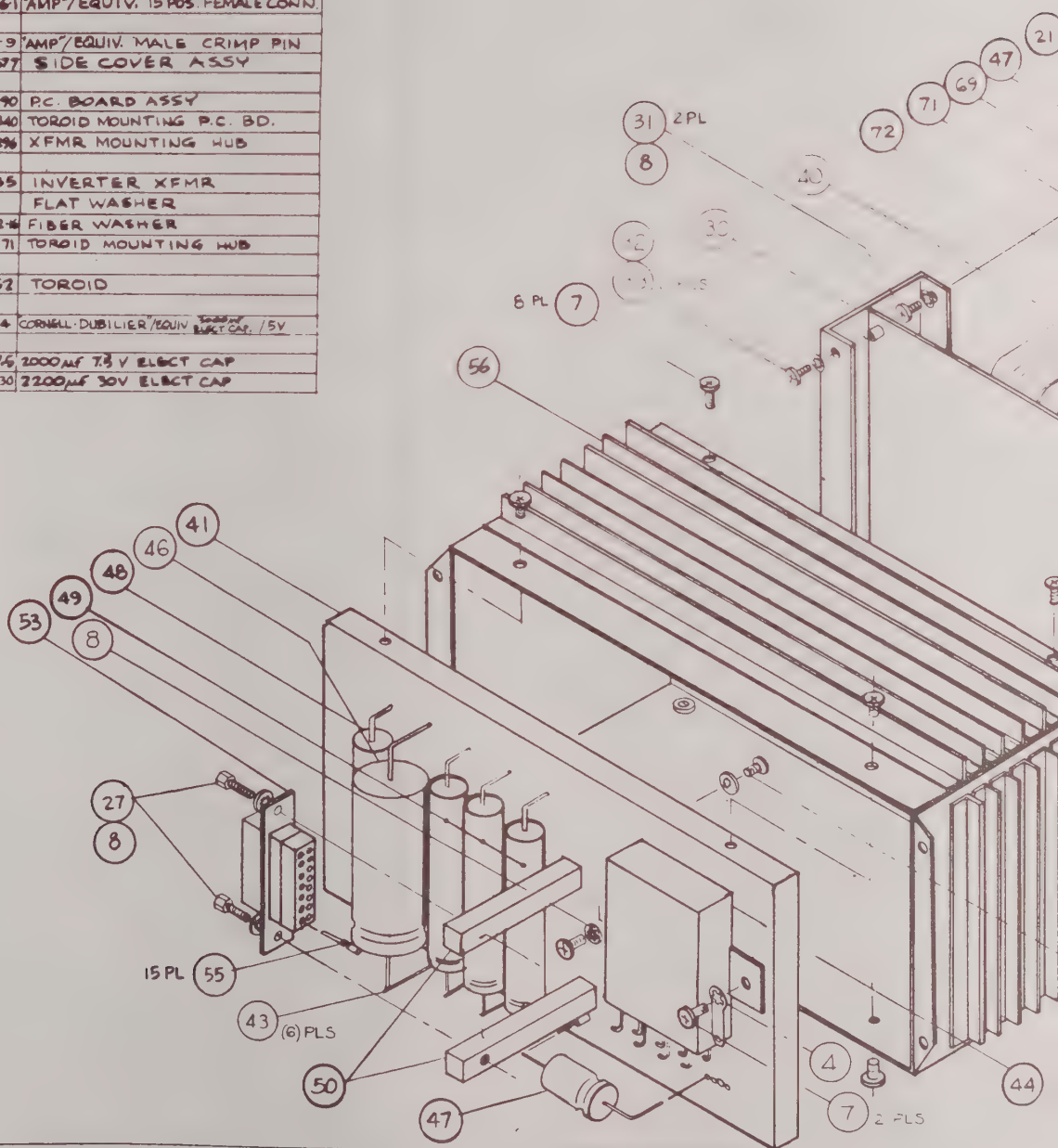

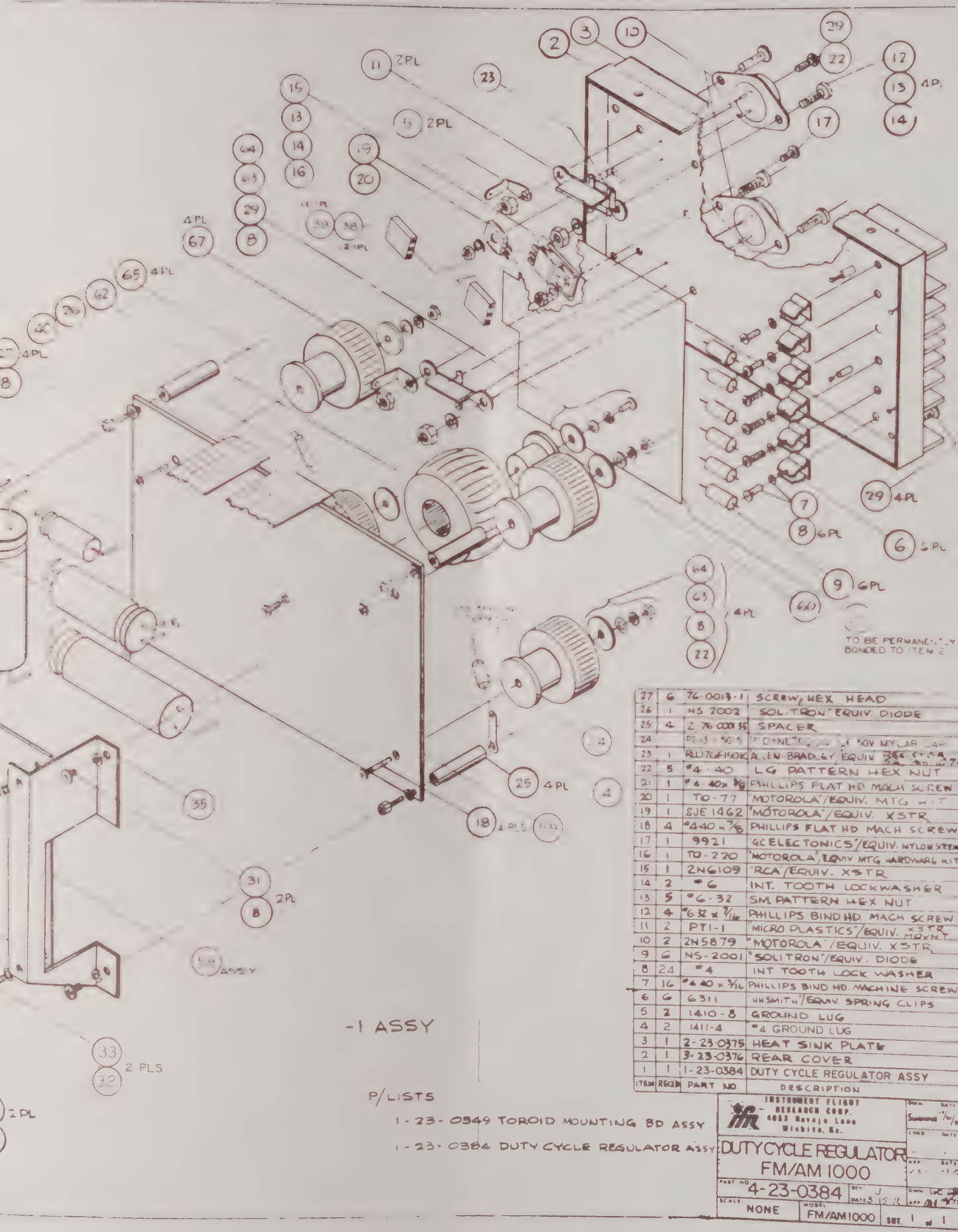

ITEM	REQ'D	PART NO.	DESCRIPTION
27	6	76-0013-1	SCREW, HEX HEAD
26	1	NS 2002	"SOLITRON" EQUIV. DIODE
25	4	2-76-0001 35	SPACER
24		PE13 50 5	"DYNE" EQUIV. 50V MYLAR CAP
23	1	RL07GF150K	ALLEN BRADLEY, EQUIV. RES. STOR.
22	5	#4-40	LG PATTERN HEX NUT
21	1	#4-40 x 3/8	PHILLIPS FLAT HD MACH SCREW
20	1	TO-77	"MOTOROLA"/EQUIV. MTG KIT
19	1	SJE 1462	"MOTOROLA"/EQUIV. XSTR
18	4	#4-40 x 7/8	PHILLIPS FLAT HD MACH SCREW
17	1	9921	"GC ELECTONICS"/EQUIV. NYLON SCREW
16	1	TO-220	"MOTOROLA"/EQUIV MTG HARDWARE KIT
15	1	2N6109	"RCA"/EQUIV. XSTR
14	2	#6	INT. TOOTH LOCKWASHER
13	5	#6-32	SM. PATTERN HEX NUT
12	4	#6-32 x 7/16	PHILLIPS BIND HD. MACH SCREW
11	2	PT1-1	"MICRO PLASTICS"/EQUIV. XSTR MOUNT
10	2	2N5879	"MOTOROLA"/EQUIV. XSTR
9	6	NS-2001	"SOLITRON"/EQUIV. DIODE
8	24	#4	INT TOOTH LOCK WASHER
7	16	#4-40 x 3/16	PHILLIPS BIND HD. MACHINE SCREW
6	6	6311	"HHSMITH"/EQUIV. SPRING CLIPS
5	2	1410-8	GROUND LUG
4	2	1411-4	#4 GROUND LUG
3	1	2-23-0375	HEAT SINK PLATE
2	1	3-23-0376	REAR COVER
1	1	1-23-0384	DUTY CYCLE REGULATOR ASSY

Figure 6-15

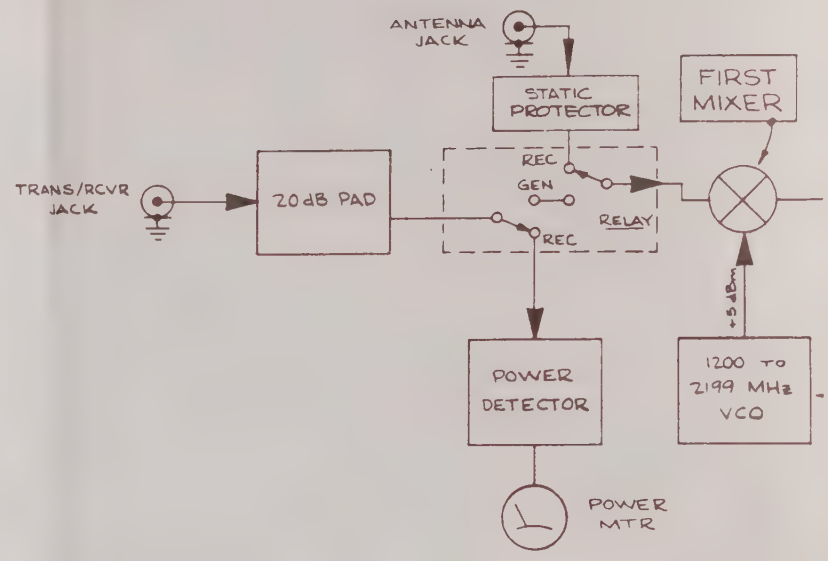
ANTENNA JACK
STATIC PROTECTOR
FIRST MIXER
TRANS/RCVR JACK
20dB PAD
REC
GEN
RELAY
REC
+5dBm
POWER DETECTOR
1200 TO 2199 MHz VCO
POWER MTR

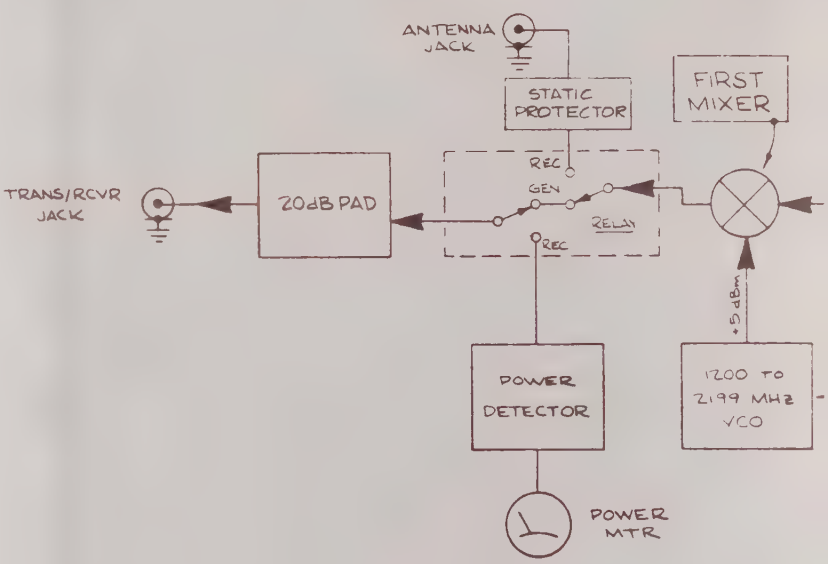
ANTENNA JACK
STATIC PROTECTOR
FIRST MIXER
TRANS/RCVR JACK
20dB PAD
REC
GEN
RELAY
REC
+5dBm
POWER DETECTOR
1200 TO 2199 MHz VCO
POWER MTR

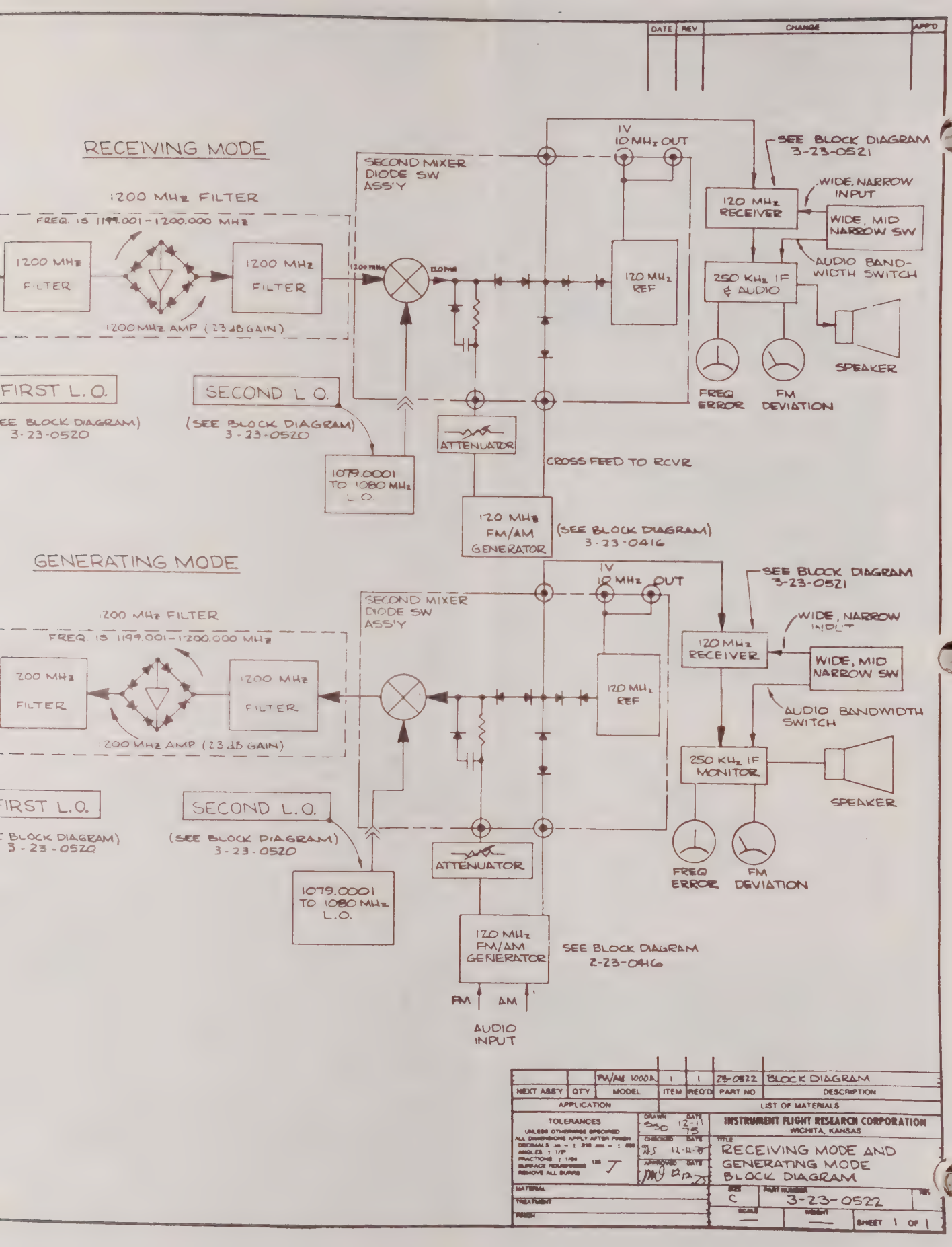
DATE
REV
CHANGE
APP'D
RECEIVING MODE
1200 MHz FILTER
FREQ. IS 1199.001-1200.000 MHz
1200 MHz FILTER
1200 MHz FILTER
1200 MHz AMP (23 dB GAIN)
SECOND MIXER DIODE SW ASS'Y
1V 10 MHz OUT
120 MHz REF
SEE BLOCK DIAGRAM 3-23-0521
120 MHz RECEIVER
WIDE, NARROW INPUT
WIDE, MID NARROW SW
AUDIO BAND-WIDTH SWITCH
250 KHz IF & AUDIO
SPEAKER
FREQ ERROR
FM DEVIATION
FIRST L.O.
SECOND L.O.
(SEE BLOCK DIAGRAM) 3-23-0520
1079.0001 TO 1080 MHz L.O.
ATTENUATOR
CROSS FEED TO RCVR
120 MHz FM/AM GENERATOR
(SEE BLOCK DIAGRAM) 3-23-0416
GENERATING MODE
1200 MHz FILTER
FREQ. IS 1199.001-1200.000 MHz
200 MHz FILTER
1200 MHz FILTER
1200 MHz AMP (23 dB GAIN)
SECOND MIXER DIODE SW ASS'Y
1V 10 MHz OUT
120 MHz REF
SEE BLOCK DIAGRAM 3-23-0521
120 MHz RECEIVER
WIDE, NARROW INPUT
WIDE, MID NARROW SW
AUDIO BANDWIDTH SWITCH
250 KHz IF MONITOR
SPEAKER
FREQ ERROR
FM DEVIATION
FIRST L.O.
SECOND L.O.
(SEE BLOCK DIAGRAM) 3-23-0520
1079.0001 TO 1080 MHz L.O.
ATTENUATOR
120 MHz FM/AM GENERATOR
SEE BLOCK DIAGRAM 2-23-0416
FM
AM
AUDIO INPUT
FM/AM 1000A
1
1
23-0522
BLOCK DIAGRAM
NEXT ASS'Y
QTY
MODEL
ITEM
REQ'D
PART NO
DESCRIPTION
APPLICATION
LIST OF MATERIALS
TOLERANCES
INSTRUMENT FLIGHT RESEARCH CORPORATION
WICHITA, KANSAS
RECEIVING MODE AND GENERATING MODE BLOCK DIAGRAM
C
3-23-0522
SHEET 1 OF 1

Figure 6-16

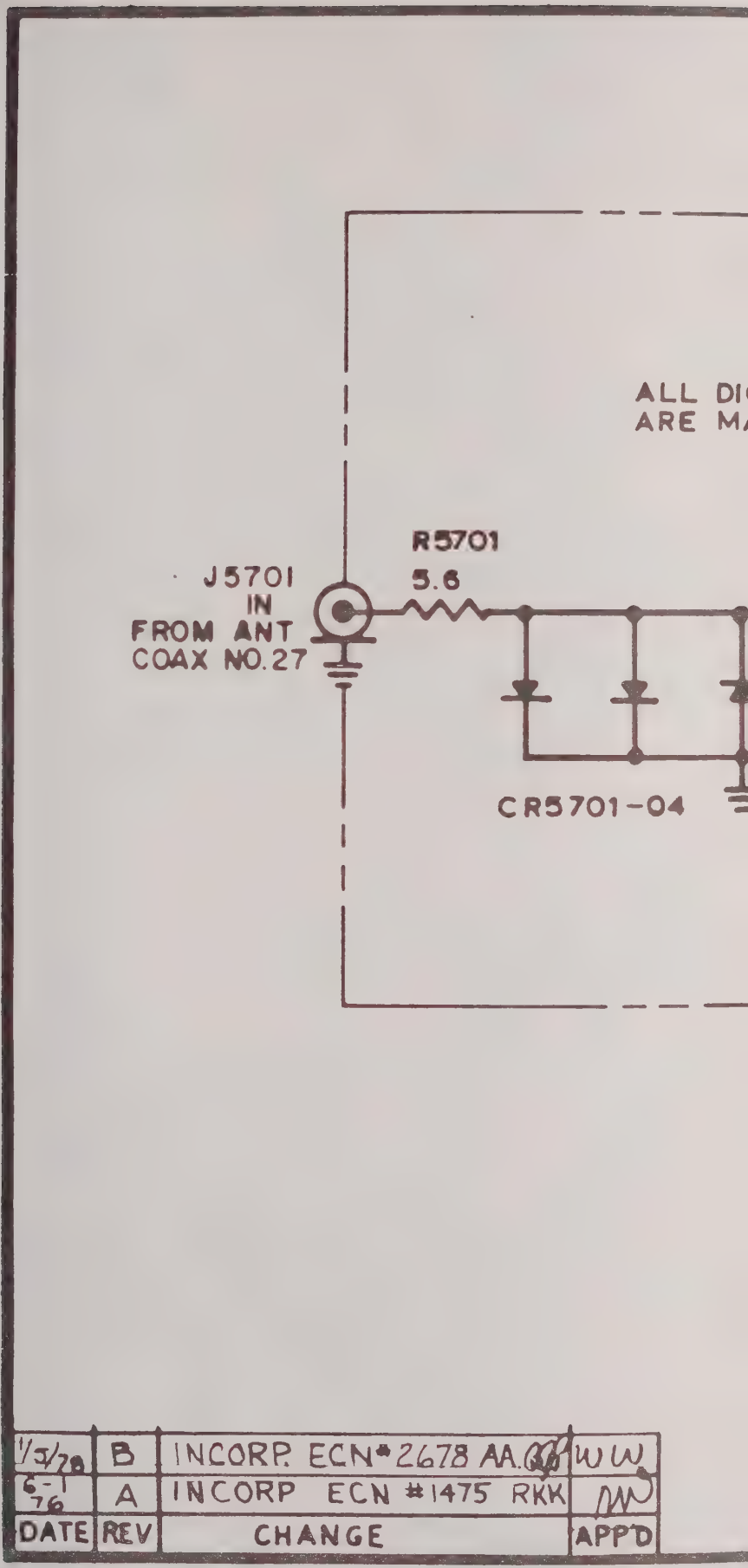

DATE	REV	CHANGE	APP'D
1/3/78	B	INCORP. ECN* 2678 AA.	WW
6-1-76	A	INCORP ECN #1475 RKK	

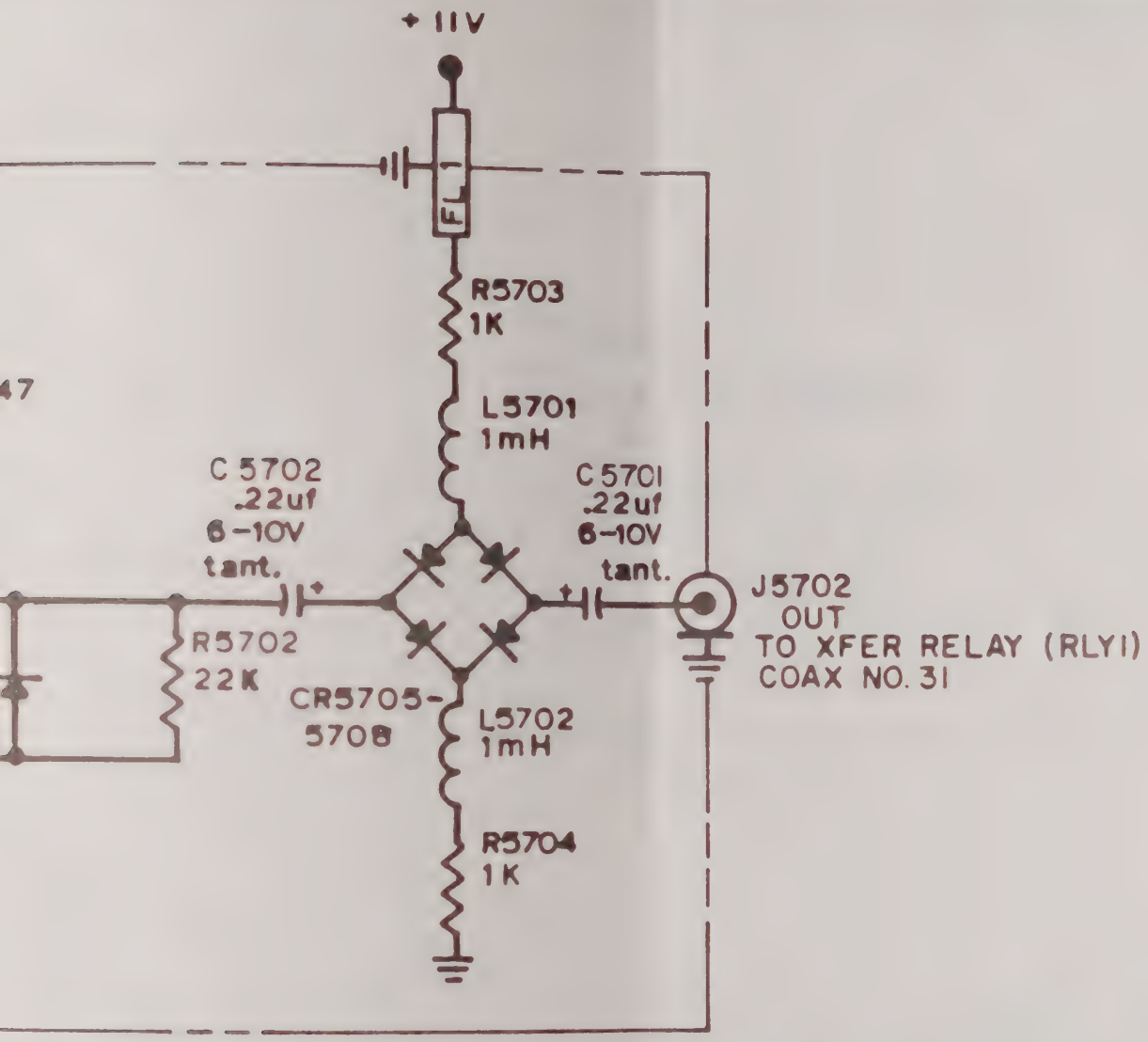

INSTRUMENT FLIGHT RESEARCH CORP. 4053 Navajo Lane Wichita, Ks.		DWN [illegible] DATE 10-16-75
		CHKD [illegible] DATE 10-15-75
STATIC DISCHARGE PROTECTOR (FM-1000)		APP [illegible] DATE 10-17-75
PART NO 1-23-0457	REV B DATE 1/5/78	DWN RKK APP [illegible]
SCALE —	MODEL FM-1000	SHT. 1 of 1

Figure 6-17

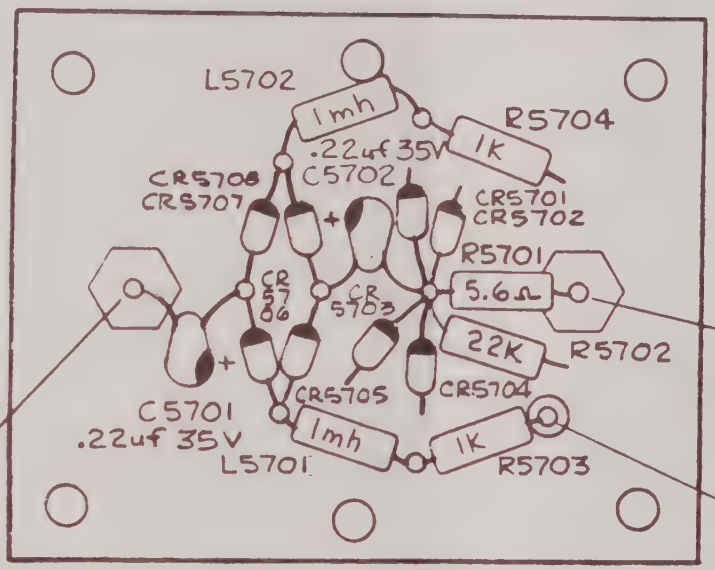

NO SCALE

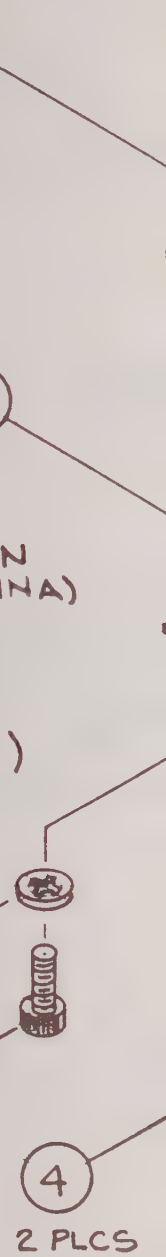

NOTES:
1. REF DWG:
   SCHEMATIC 1-23-0457
2. UNLESS OTHERWISE SPECIFIED;
   ALL RESISTORS ARE 1/4W, 10%
   ALL DIODES ARE MA47047

DATE	REV	CHANGE	APP'D
4/20/78	B	INC. ECN # 2725 A.A.	WW

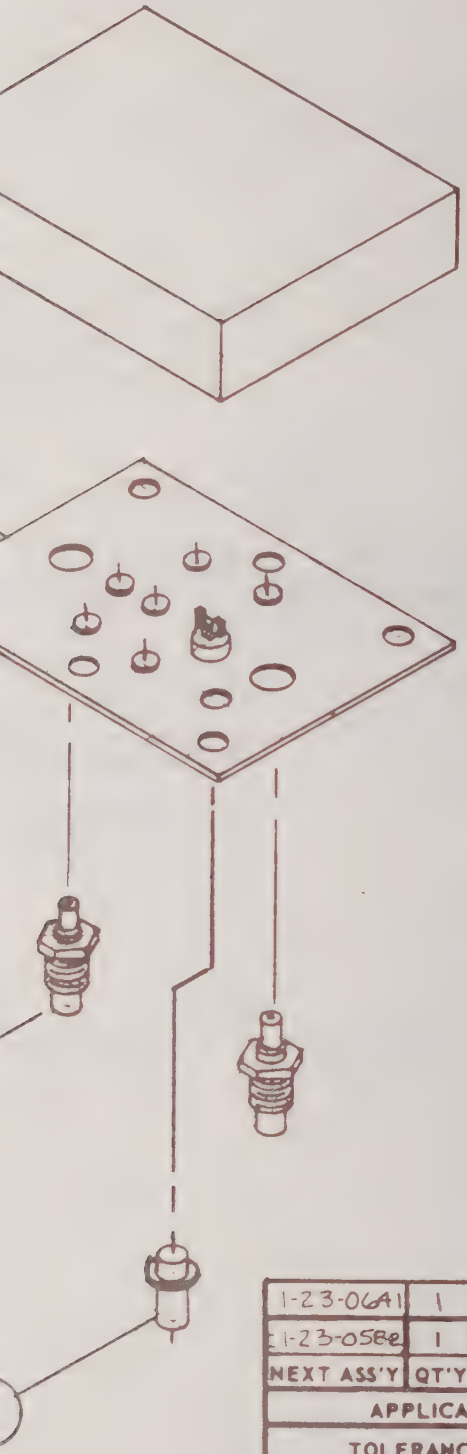

ITEM	REQ'D	PART NO.	DESCRIPTION
7	1	1250-003	CAP FEEDTHRU "ERIE"/EQUIV
6	4	#4	LOCKWASHER, INT TOOTH
5	4	#4-40 x 1/4	PBHMS
4	2	17-0204-000	CONNECTOR "AEP"/EQUIV
3	1	23-0601	COVER
2	1	23-0600	PLATE, TERMINAL
1	1	23-0602	ASSY

NEXT ASS'Y	QT'Y	MODEL
1-23-0641	1	FM/AM 1000S
1-23-0582	1	FM/AM 1000A

APPLICATION

LIST OF MATERIALS

TOLERANCES
UNLESS OTHERWISE SPECIFIED
ALL DIMENSIONS APPLY AFTER FINISH
DECIMALS: ± .005
ANGLES: ± 1/2°
FRACTIONS: ± 1/64
SURFACE ROUGHNESS 125
REMOVE ALL BURRS

DRAWN DATE 12-12-77
CHECKED DATE 12/15/77
APPROVED DATE 12/15/77

INSTRUMENT FLIGHT RESEARCH CORPORATION
WICHITA, KANSAS

TITLE
STATIC DISCHARGE PROTECTOR ASSY

MATERIAL —
TREATMENT —
FINISH —

SIZE B | PART NUMBER 2-23-0602 | REV B

SCALE — | WEIGHT — | SHEET 1 OF 1

Figure 6-18

DATE	REV	CHANGE	APP'D

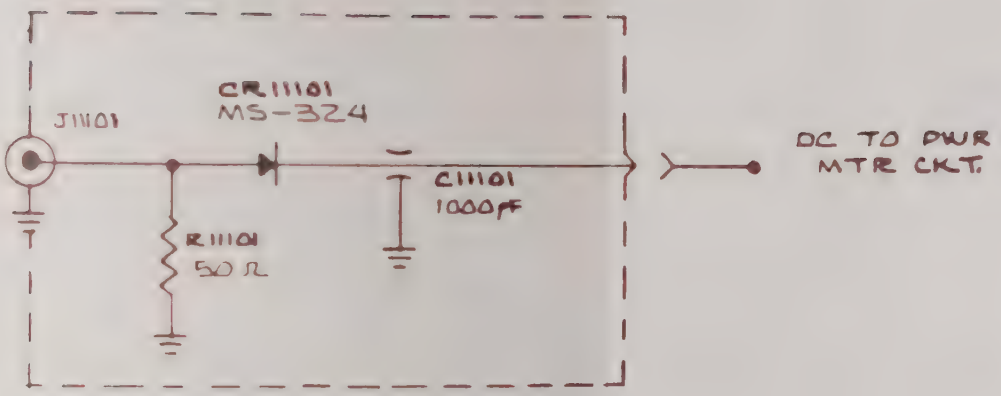

—	—	FM/AM 1000	—	—	23-0111	SCHEMATIC
NEXT ASS'Y	QTY	MODEL	ITEM	REQ'D	PART NO.	DESCRIPTION

APPLICATION | LIST OF MATERIALS

TOLERANCES
UNLESS OTHERWISE SPECIFIED
ALL DIMENSIONS APPLY AFTER FINISH
DECIMALS .xx = ± .010 .xxx = ± .005
ANGLES ± 1/2°
FRACTIONS ± 1/64
SURFACE ROUGHNESS 125
REMOVE ALL BURRS

DRAWN DATE 3-27-74
CHECKED DATE W.S. 3-27-74
APPROVED DATE

INSTRUMENT FLIGHT RESEARCH CORPORATION
WICHITA, KANSAS.

TITLE
POWER MONITOR
(SCHEMATIC)

MATERIAL
TREATMENT
FINISH

SIZE | PART NUMBER 1-23-0111 | REV
SCALE | WEIGHT | SHEET 1 OF 1

Figure 6-19

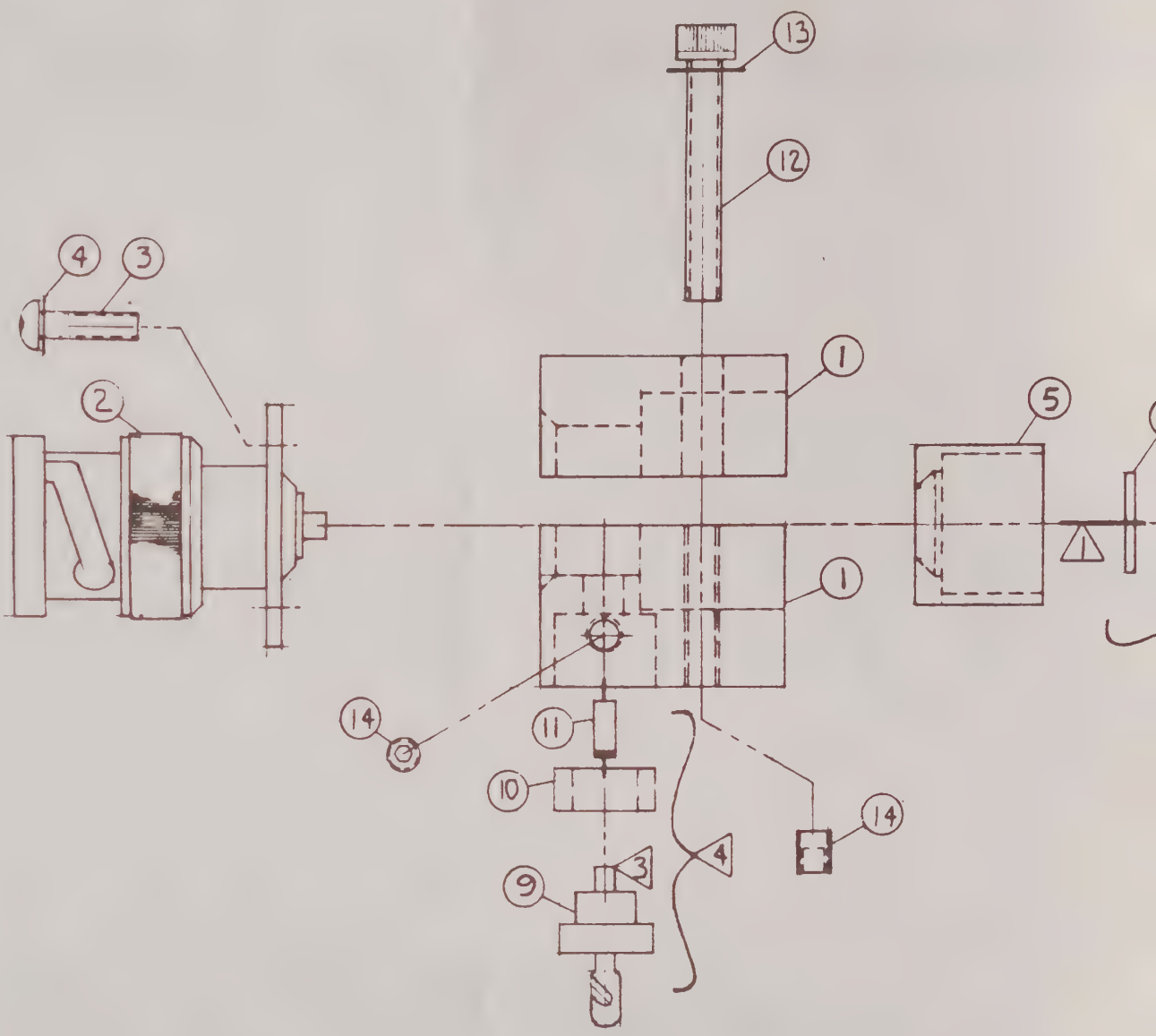

7 ALL PARTS OF ANY ASSEMBLY STEP TO BE THOROUGHL
BEFORE PROCEEDING TO NEXT STEP.

6 CHECK RESISTANCE VALUE TO ASSURE 50Ω ±5Ω.

5 ASSEMBLE TO ATTACH CONNECTOR CENTER CONDUCTOR
AND DIODE IN HOUSING.

4 ATTACH DIODE TO FEEDTHRU AND INSTALL IN BUSHIN

3 CUT FEEDTHRU CAP CENTER CONDUCTOR (3/32 PROTRU

2 PLACE RESISTOR IN BUSHING WITH 4 BELLVILLE WAS
AS SHOWN). INSTALL PLUG FLUSH, FINGER TIGHT U
FIRMLY AT RIM. CHECK FOR CRACKS IN RESISTOR

1 INSTALL NO. 32 BUSS (5/16 PROTRUDING) in 50Ω D

NOTES:

DATE	REV	CHANGE	APP'D
4-18-77	C	ORIGINAL RELEASE AFA	MO
2-21-78	D	INCORP ECN # 2831 T.T	WW

ITEM	REQ'D	PART NO.	DESCRIPTION
14	2	#4-40-1/8	SOCKET HEAD SET SCREW
13	2	# 4	INT. TOOTH LOCKWASHER
12	2	#4-40-3/4	SOCKET HEAD SCREW
11	1	MS-324	DIODE
10	1	76-0001-18	BUSHING
9	1	FASC-102W	1000pf FEEDTHRU CAP
8	4	BS-R2	BELLEVILLE WASHER
7	1	62D-31250	50Ω DISC. RESISTOR
6	1	2-23-0635-2	PLUG
5	1	2-23-0635-1	BUSHING
4	4	#2	INT. TOOTH LOCKWASHER
3	4	#2-56-5/16	PHILLIPS BIND HD. MACH. SCREW
2	1	1-76-0299	MALE "BNC" CONN.
1	1	23-0337	POWER MONITOR BLOCK SET
—	—	23-0228	POWER MONITOR ASS'Y.

LIST OF MATERIALS

NEXT ASS'Y	QT'Y	MODEL
23-0582	1	FM/AM-1000

APPLICATION

EANED

RESISTOR

).
(STACKED
SEATED

RESISTOR.

TOLERANCES
UNLESS OTHERWISE SPECIFIED
ALL DIMENSIONS APPLY AFTER FINISH
DECIMALS: ± .005
ANGLES: ± 1/2°
FRACTIONS: ± 1/64
SURFACE ROUGHNESS 125
REMOVE ALL BURRS

DRAWN DATE 4/18/77
CHECKED DATE 4-18-77
APPROVED DATE 4-18-77

MATERIAL
TREATMENT
FINISH

INSTRUMENT FLIGHT RESEARCH CORPORATION
WICHITA, KANSAS

TITLE
POWER MONITOR ASSEMBLY

SIZE B | PART NUMBER 2-23-0228 | REV D
SCALE 2:1 | WEIGHT — | SHEET 1 OF 1

Figure 6-20

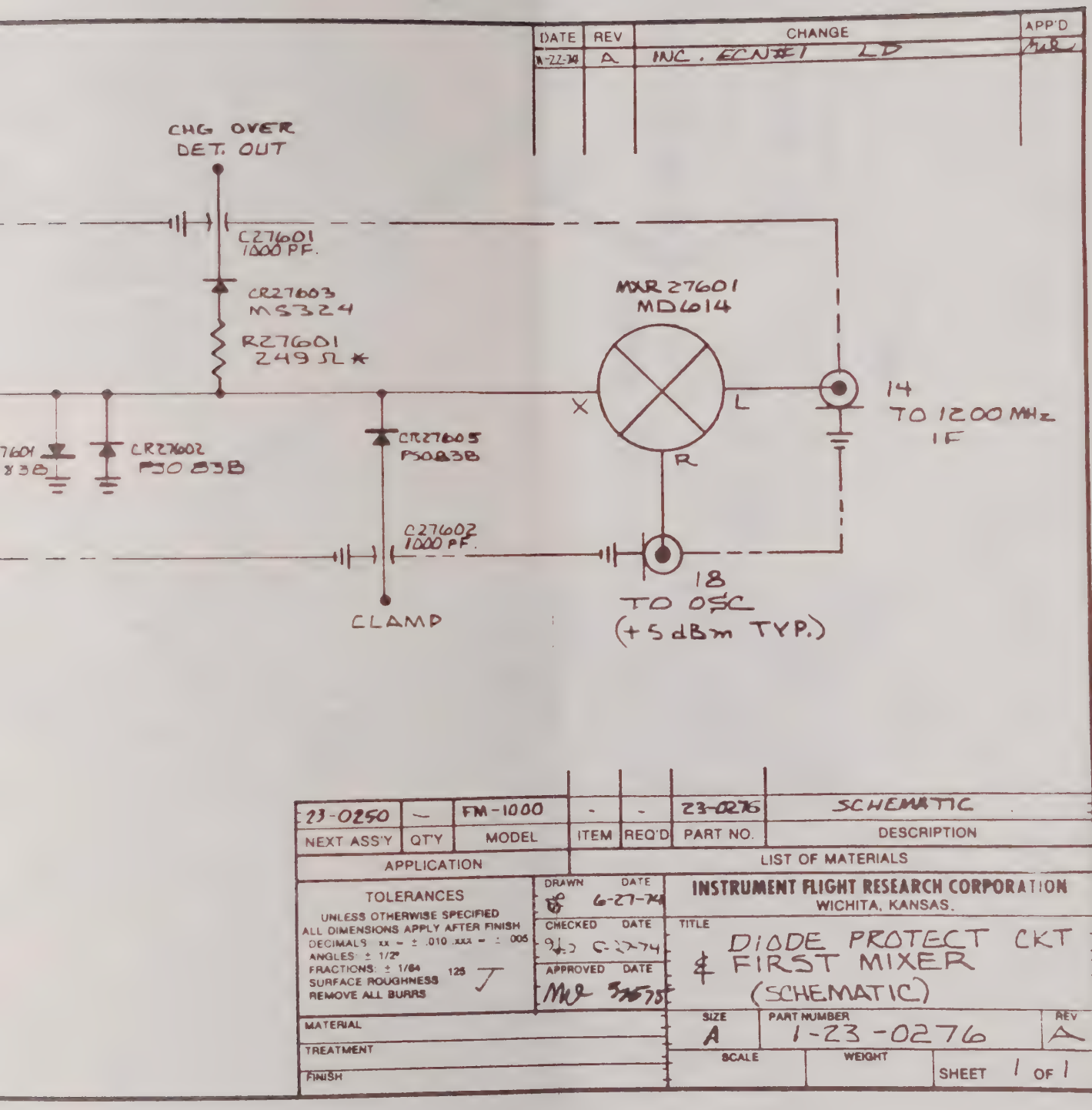
DATE
REV
CHANGE
APP'D
A
INC. ECN#1 LD
CHG OVER
DET. OUT
C27601
1000 PF.
CR27603
MS324
R27601
249 Ω *
MXR 27601
MD614
X
L
R
14
TO 1200 MHz
IF
CR27602
PSO 83B
CR27605
PSO83B
C27602
1000 PF.
CLAMP
18
TO OSC
(+5 dBm TYP.)
23-0250
—
FM-1000
-
-
23-0276
SCHEMATIC
NEXT ASS'Y
QT'Y
MODEL
ITEM
REQ'D
PART NO.
DESCRIPTION
APPLICATION
LIST OF MATERIALS
TOLERANCES
UNLESS OTHERWISE SPECIFIED
ALL DIMENSIONS APPLY AFTER FINISH
DECIMALS .xx = ± .010 .xxx = ± .005
ANGLES: ± 1/2°
FRACTIONS: ± 1/64
SURFACE ROUGHNESS 125
REMOVE ALL BURRS
DRAWN DATE 6-27-74
CHECKED DATE 6-27-74
APPROVED DATE
INSTRUMENT FLIGHT RESEARCH CORPORATION
WICHITA, KANSAS.
TITLE
DIODE PROTECT CKT
& FIRST MIXER
(SCHEMATIC)
MATERIAL
TREATMENT
FINISH
SIZE
A
PART NUMBER
1-23-0276
REV
A
SCALE
WEIGHT
SHEET 1 OF 1

Figure 6-21

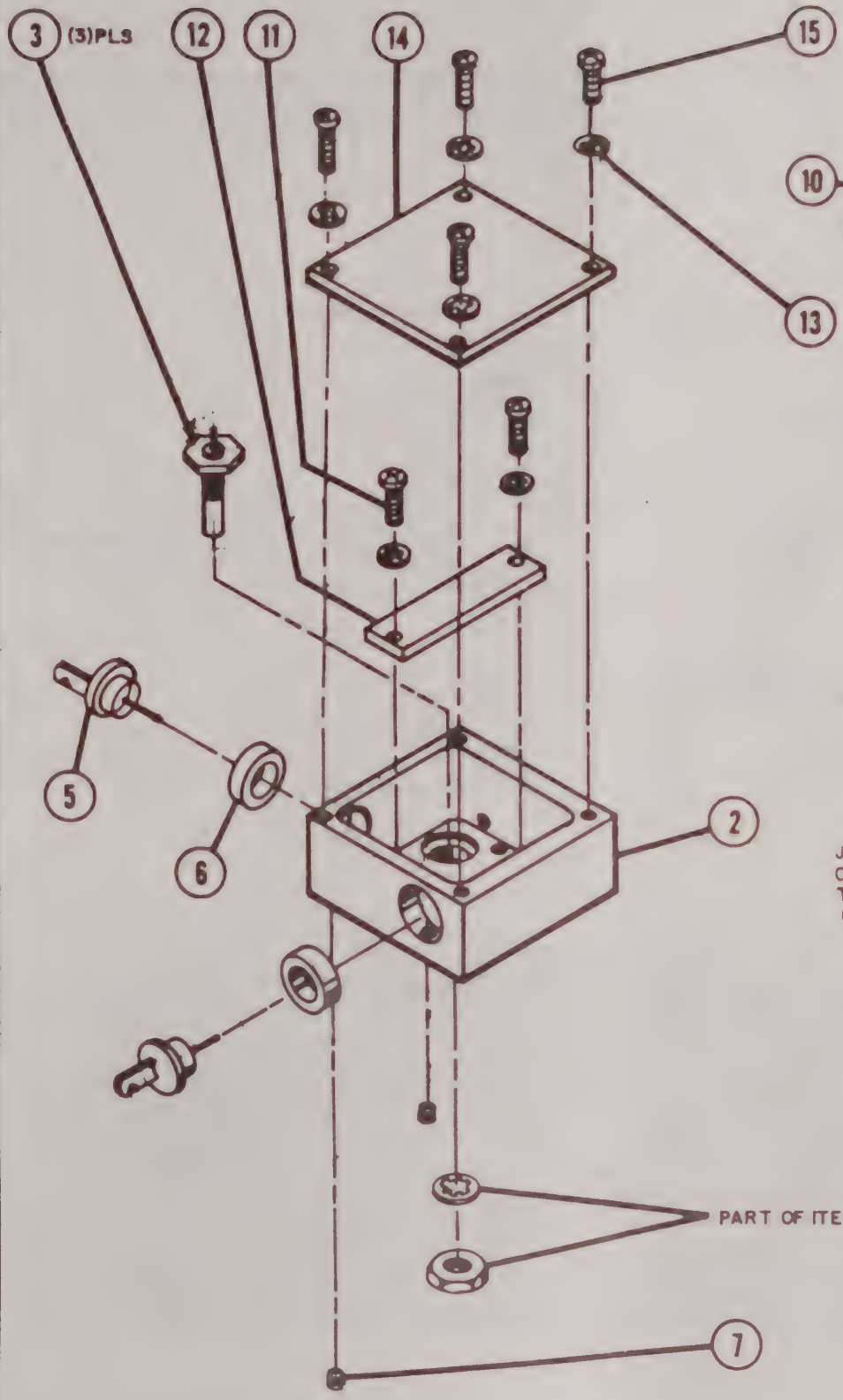

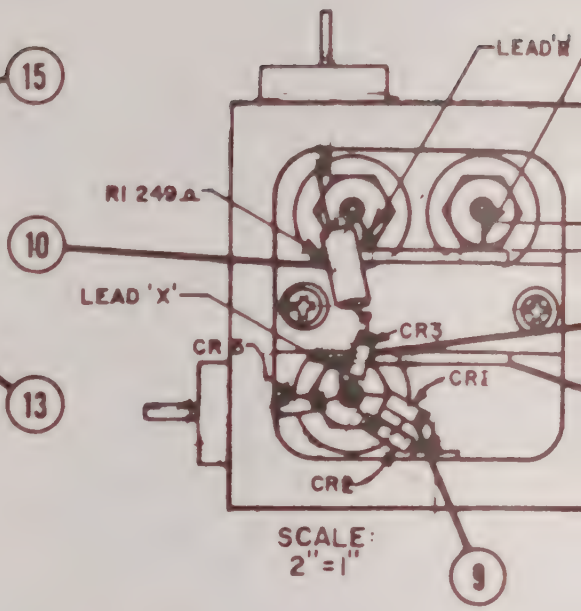

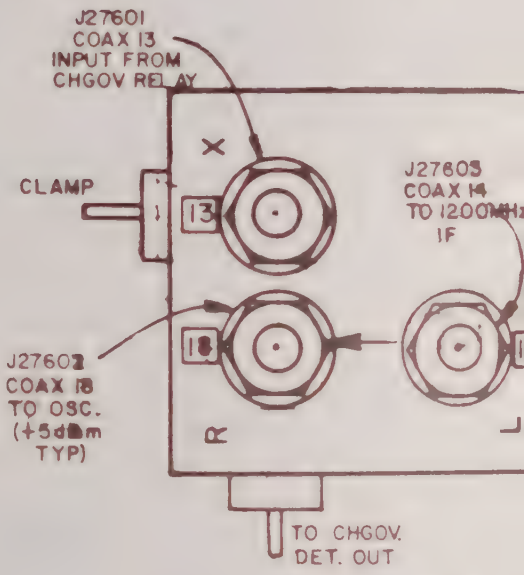

1. SCHEMATIC NO. 1-23-0276

NOTES:

DATE	REV	CHANGE	APP'D
4-19-78	C	REDRAWN	
28 JUN 78	C-2	INC. ECN #3036 TenEyck WW	WW

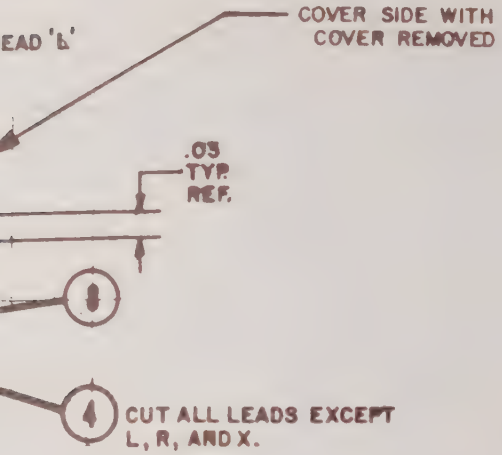

15	4	#2-56x1/4	PBHMS
14	1	1-23-0336	COVER
13	6	#2	INT TOOTH LKWSHR.
12	1	1-23-0350	CLAMP BRACKET
11	2	#2-56x5/16	PBHMS
10	1	[illegible]	"CORNING"/EQUIV 1/4W, 1% TOL. RES.
9	3	PSO-838	PARAMETRICS/EQUIV DIODE
8	1	MS 324	"SOLITRON"/EQUIV DIODE
7	2	#2-56x3/32	SOCKET HEAD SET SCREW
6	2	2-76-0001-78	BUSHING
5	2	FA5C-102W	"ALLEN-BRADLEY"/EQUIV 1000pf FDTHRU CAP.
4	1	MD614	"ANZAC"/EQUIV MIXER
3	3	[illegible]	"SEALECTRO"/EQUIV SMB MALE CONN.
2	1	2-23-0335	FIRST MIXER BLOCK
1	1	2-23-0250	FIRST MIXER ASSEMBLY
ITEM	REQ'D	PART NO.	DESCRIPTION

NEXT ASS'Y	QT'Y	MODEL
23-0641	1	FM/AM 1000B
23-0582	1	FM/AM 1000A

APPLICATION

LIST OF MATERIALS

TOLERANCES
UNLESS OTHERWISE SPECIFIED
ALL DIMENSIONS APPLY AFTER FINISH
DECIMALS: ± .005
ANGLES: ± 1/2°
FRACTIONS: ± 1/64
SURFACE ROUGHNESS 125 ✓
REMOVE ALL BURRS

DRAWN TenEyck DATE 4-19-78
CHECKED BJP DATE 4-27-78
APPROVED MJ DATE 4-28-78

INSTRUMENT FLIGHT RESEARCH CORPORATION
WICHITA, KANSAS

TITLE
FIRST MIXER ASSEMBLY

MATERIAL SEE "LIST OF MATERIALS"
TREATMENT
FINISH

SIZE	PART NUMBER	REV
B	2-23-0250	C-2

SCALE	WEIGHT	SHEET 1 OF 1
1"=1"		

Figure 6-22

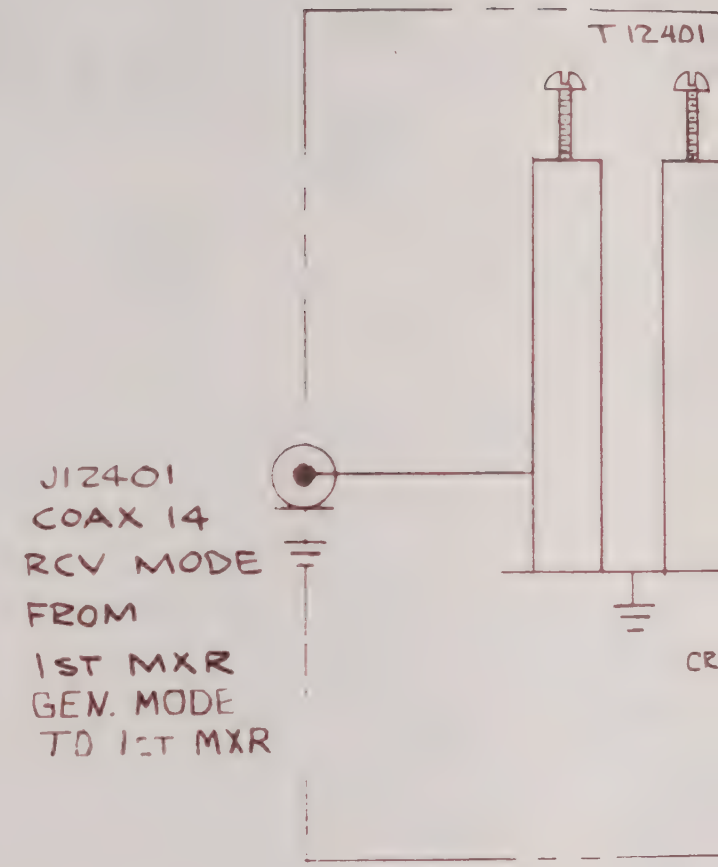

NOTE:
1. ALL DIODES ARE MA
2. ALL CHOKE COILS ARE

DATE	REV	CHANGE	APP'D
7/23	A	INC ECN # 1 LD	
7/75	B	INC ECN # 802 DLP	
8/12/78	C	INC ECN # 2914 JJ	

TO 1200 MHz AMP. INPUT
J12402 COAX 17

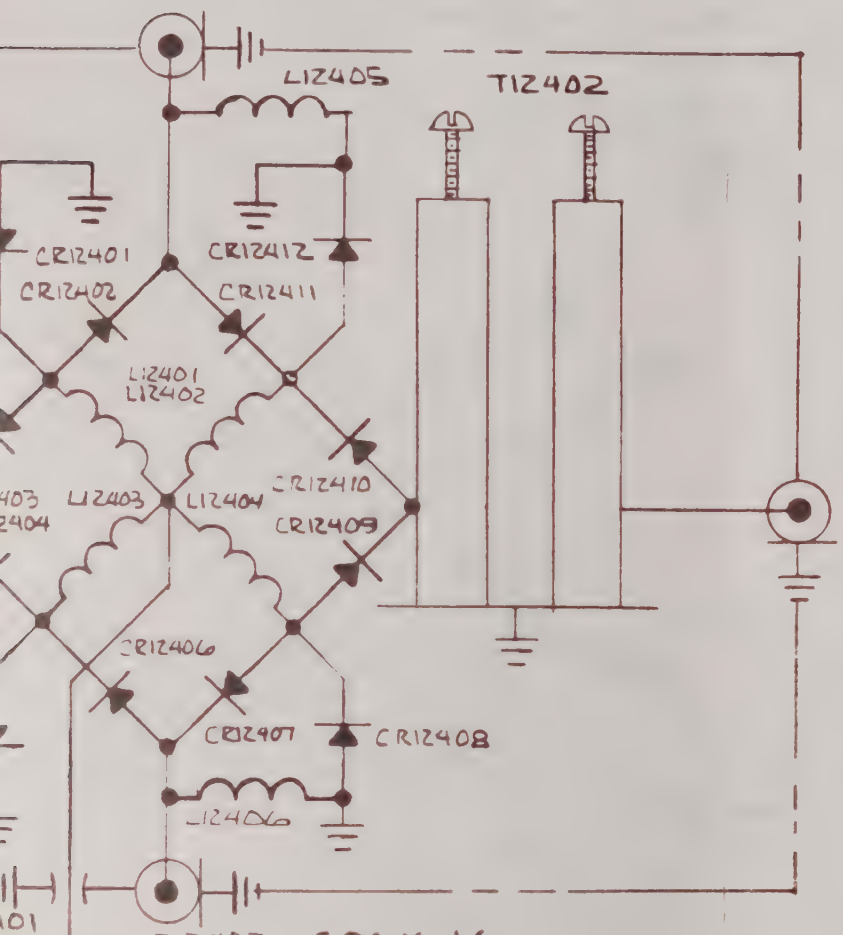

J12404 COAX 15
RCV MODE TO 2ND MXR
GEN MODE FROM 2ND MIXER

J12403 COAX 16
TO 1200 MHz AMP. OUTPUT.

NEXT ASS'Y	QT'Y	MODEL	ITEM	REQ'D	PART NO	DESCRIPTION
23-0297	1	FM/AM 1000			23-0124	SCHEMATIC

APPLICATION — LIST OF MATERIALS

TOLERANCES
UNLESS OTHERWISE SPECIFIED
ALL DIMENSIONS APPLY AFTER FINISH
DECIMALS: xx = ± .010 .xxx = ± .005
ANGLES: ± 1/2°
FRACTIONS: ± 1/64
SURFACE ROUGHNESS 125 ✓
REMOVE ALL BURRS

DRAWN DATE 4-5-74
CHECKED DATE 8-6-74
APPROVED DATE 7/7/74

INSTRUMENT FLIGHT RESEARCH CORPORATION
WICHITA, KANSAS.

TITLE
1200MHz FILTER & REC.-GEN. SW.

MATERIAL
TREATMENT
FINISH

SIZE	PART NUMBER	REV
A	1-23-0124	C

SCALE	WEIGHT	SHEET 1 OF 1
—	—	

Figure 6-

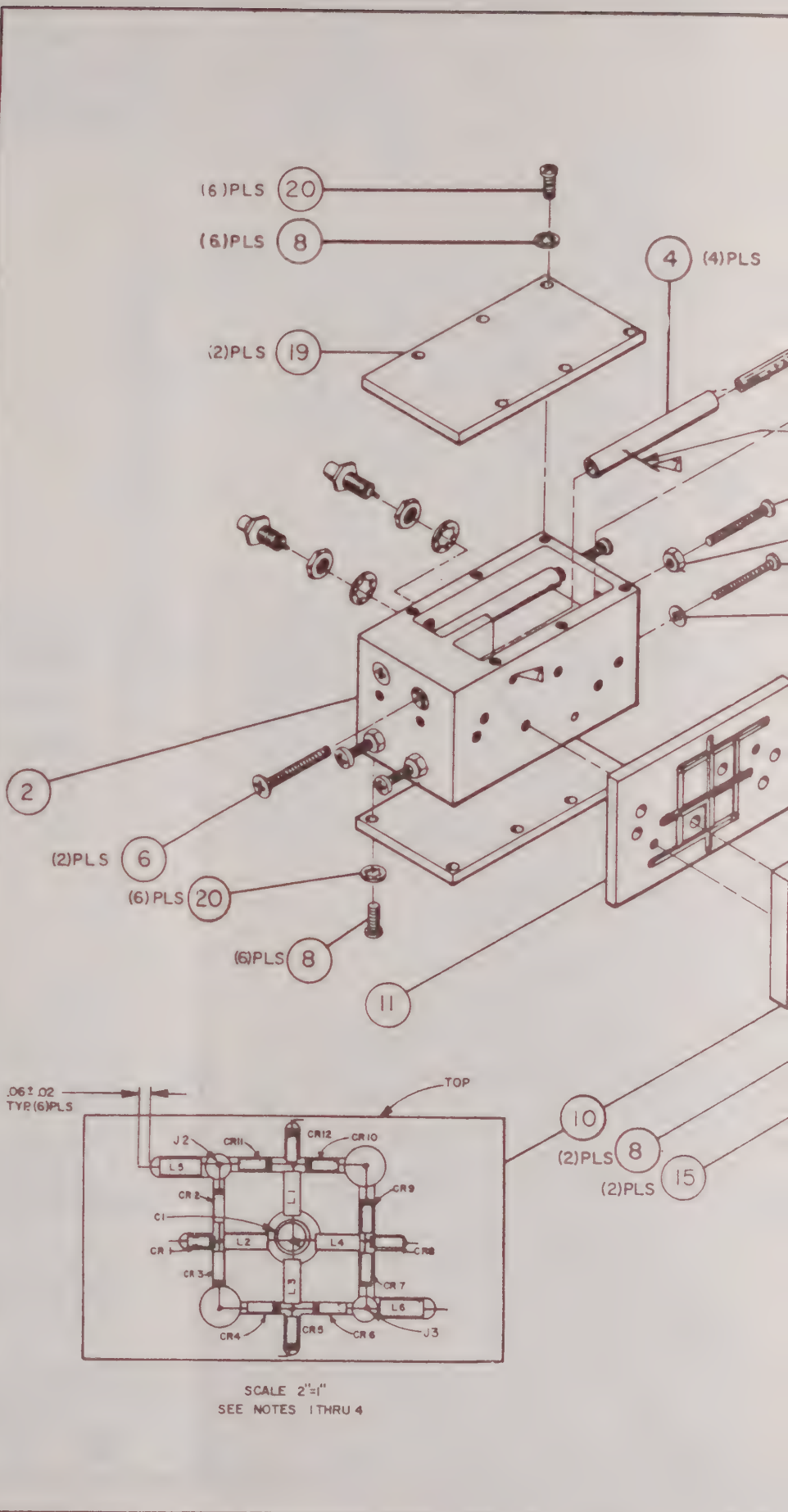

SCALE 2"=1"

SEE NOTES 1 THRU 4

DATE	REV	CHANGE	APP'D
3-14-78	H	ORIGINAL RELEASE T.T.	mkj
4/1/78	H	INC ECN 2914 JJ	WW

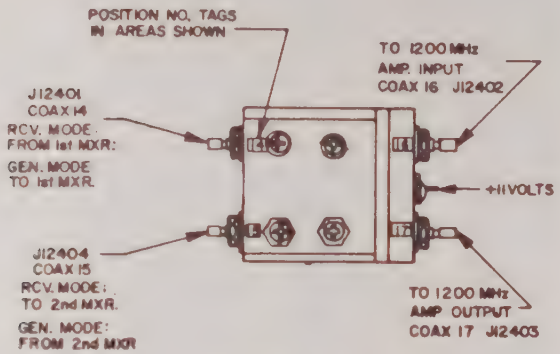

DETAIL A
SCALE 1"=1"

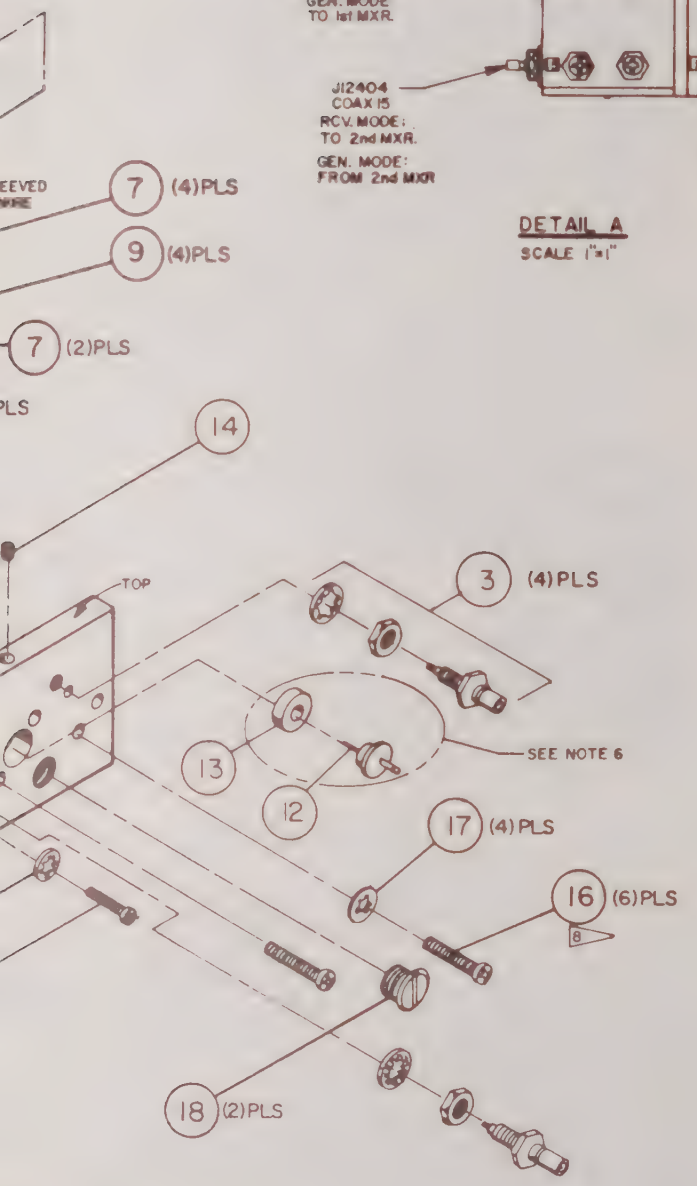

ITEM	REQ'D	PART NO.	DESCRIPTION
20	12	#4-40x1/4	PBHMS
19	2	1-23-0298	COVER
18	2	1-14-0273	PLUG
17	4	#6	INTERNAL TOOTH LOCKWASHER
16	6	#6-32x9/16	PBHMS
15	2	#4-40x3/8	PBHMS
14	1	#4-40x1/8	SOCKET HEAD SET SCREW
13	1	2-76-0001-18	BUSHING
12	1	FA5C-102W	"ALLEN-BRADLEY"/EQUIV FEEDTHRU CAP 1000pf
11	1	2-23-0295-2	1200 MHz DIODE SWITCH BLOCK HALF
10	1	2-23-0295-1	1200 MHz DIODE SWITCH BLOCK HALF
9	4	#4-40	LARGE PATTERN HEX NUT
8	14	#4	INTERNAL TOOTH LOCKWASHER
7	6	#4-40x3/4	PBHMS
6	2	#4-40x3/4	PFHMS
5	A/R	TFT-250/10	"ALPHA"/EQUIV 10 GA TUBING (MIN. LG. 1.66)
4	4	1-08-0081	TUNING POLE
3	4	17-0219-000	"AEP"/EQUIV SMB MALE CONNECTOR
2	1	3-23-0287	1200 MHz FILTER BLOCK
1	1	3-23-0297	1200 MHz FILTER DIODE SWITCH ASSEMBLY

LIST OF MATERIALS

8 > APPLY NO. 34-31, RED, GRADE A, "LOCTITE" TO ITEM 16 THREADS, AND TORQUE TO 6 1/4 IN. LBS. THEN TORQUE ITEM 15 TO 4 1/4 IN. LBS.

7 > INSERT LEAD THRU HOLE. SOLDER THIS LEAD TO COMPONENTS IN ITEM 10.

6. SOLDER ITEM 12 INTO ITEM 13.

5. SCHEMATIC NO. 1-23-0124.

4. SEE "DETAIL A" FOR COAX CONNECTOR DATA.

3. COMPONENT DESIGNATIONS HAVE 124 PREFIX I.e. CR12401, L12401, J12401 etc.

2. ALL CHOKE COILS ARE "DELEVAN"/EQUIV #1025-08, .33 μH

1. ALL DIODES ARE "MICROWAVE ASSOC."/ EQUIV #470-47.

PC/AM 0078A	PC/FM 0080A	MODEL
1	—	QTY
23-0582		NEXT ASSY
23-0641		APPLICATION

TOLERANCES
UNLESS OTHERWISE SPECIFIED
ALL DIMENSIONS APPLY AFTER FINISH
DECIMALS .xx = ± .010 .xxx = ± .005
ANGLES ± 1/2°
FRACTIONS ± 1/64
SURFACE ROUGHNESS 125
REMOVE ALL BURRS

DRAWN Ten Eyck DATE 3-14-78
CHECKED DATE
APPROVED DATE 3/20/78

MATERIAL SEE LIST of MATERIALS
FINISH

-IFR INC-
WICHITA, KANSAS

TITLE
1200 MHz FILTER DIODE SWITCH ASSEMBLY

SIZE C | PART NUMBER 3-23-0297 | REV H
SCALE 1"=1" | WEIGHT | SHEET 1 OF 1

Figure 6-24

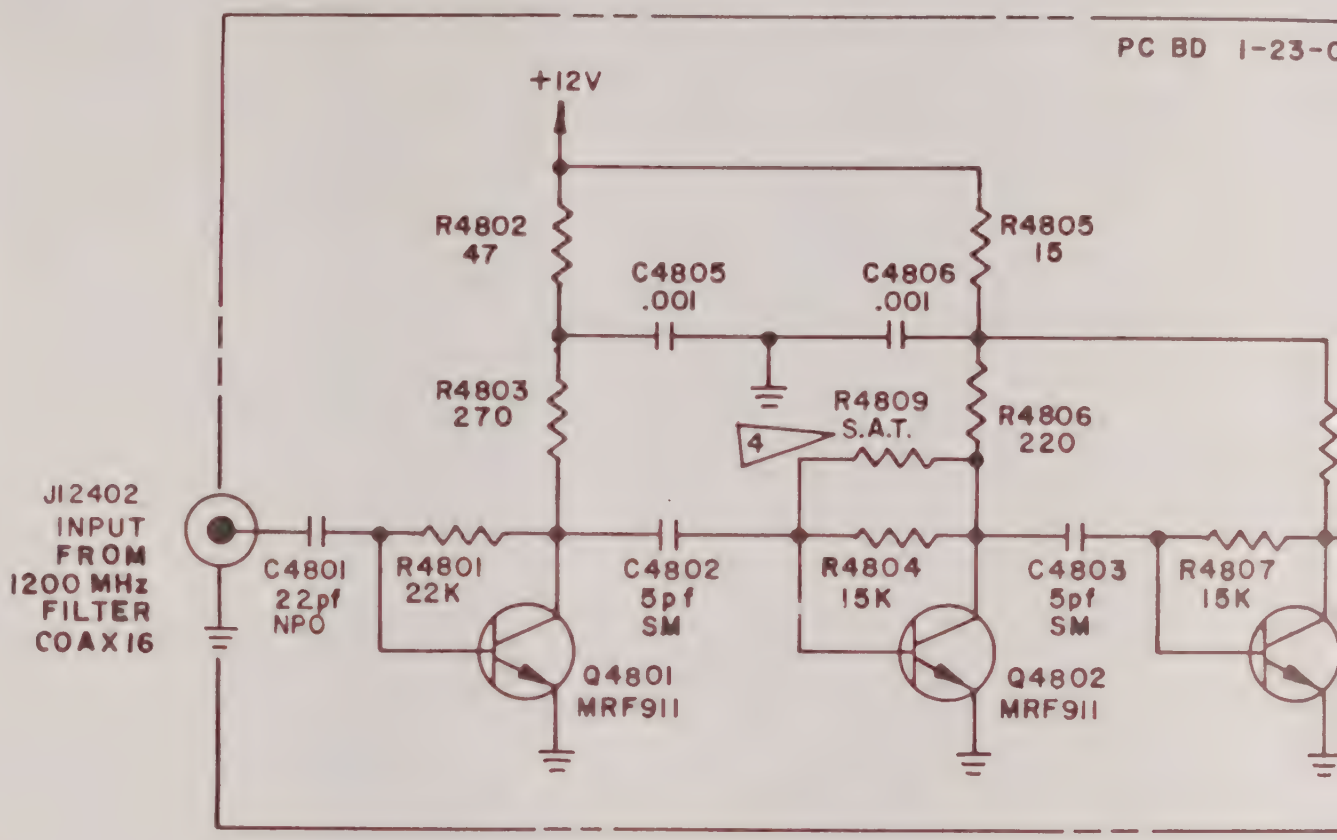

NOTES:

1. ALL RESISTORS ARE IN 1/4 W, 10%, AND VALUES ARE IN OHMS UNLESS OTHERWISE SPECIFIED.
2. ALL CAPACITORS ARE IN MICROFARADS UNLESS OTHERWISE SPECIFIED.
3. LAST NUMBERS USED: R4809, C4806, Q4803

4 SELECT AT TEST TO REDUCE GAIN

DATE	REV	CHANGE	APP'L
1-7-78	A	INC ECN 2682 JAJ	WW
1-16-78	A-1	INC ECN 2709 JAJ	WW

ITEM	REQ'D	PART NO.	DESCRIPTION
1	1	23-0548	SCHEMATIC

LIST OF MATERIALS

NEXT ASS'Y	QT'Y	MODEL
23-0549	1	[illegible]

APPLICATION

TOLERANCES
UNLESS OTHERWISE SPECIFIED
ALL DIMENSIONS APPLY AFTER FINISH
DECIMALS: xx = ± .010 xxx = ± .005
ANGLES ± 1/2°
FRACTIONS: ± 1/64
SURFACE ROUGHNESS 125
REMOVE ALL BURRS

DRAWN SSD DATE 5-5-76
CHECKED [illegible] DATE 5-10-76
APPROVED [illegible] DATE 8 8 76

-IFR INC-
WICHITA, KANSAS

TITLE
1200MHz AMPLIFIER

MATERIAL —
FINISH —

SIZE B
PART NUMBER 2-23-0548
REV A-1
SCALE —
WEIGHT —
SHEET 1 OF 1

Figure 6-2

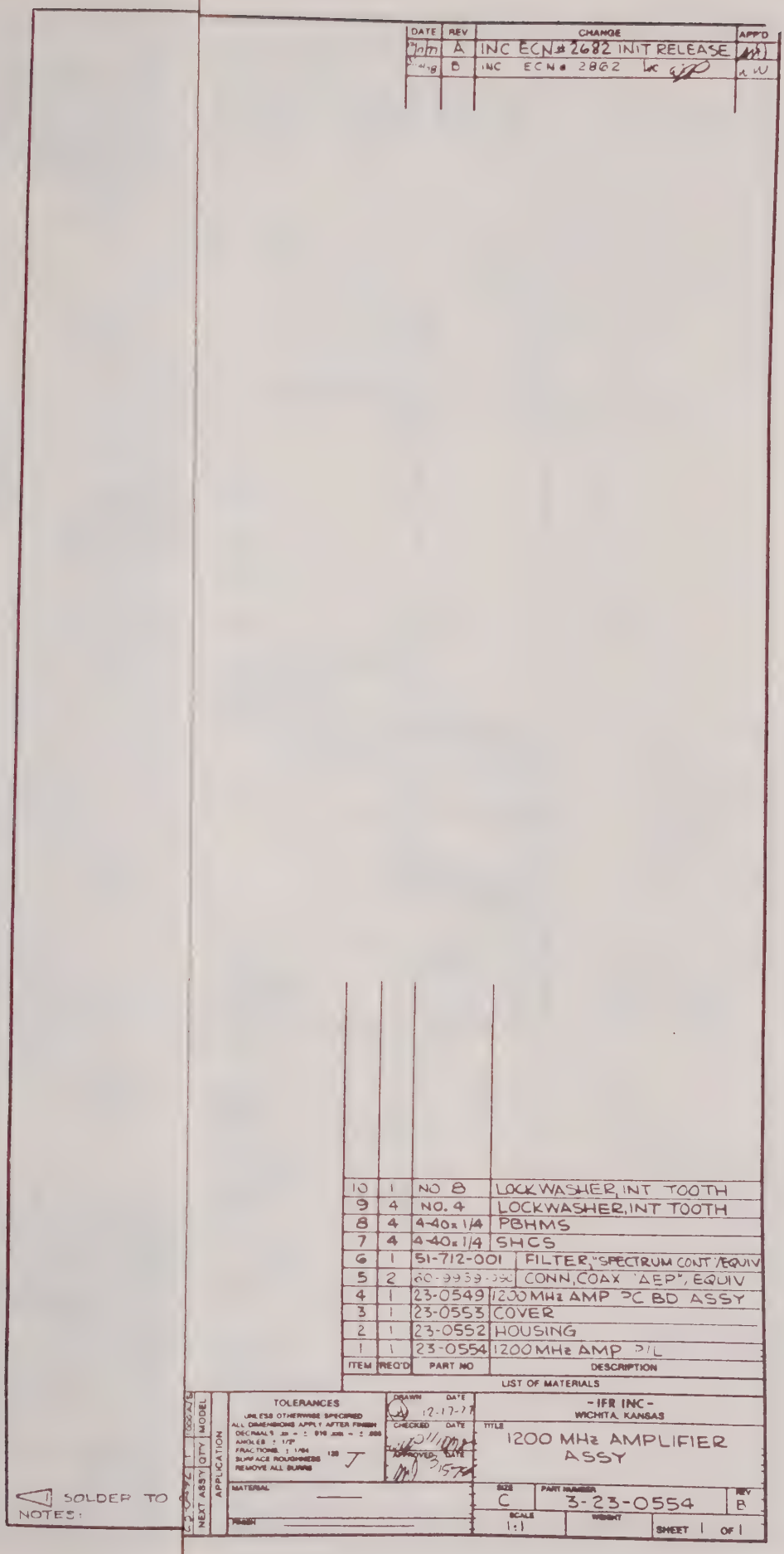

DATE	REV	CHANGE	APP'D
[illegible]	A	INC ECN# 2682 INIT RELEASE	[illegible]
[illegible]	B	INC ECN# 2862 [illegible]	[illegible]

ITEM	REQ'D	PART NO	DESCRIPTION
10	1	NO 8	LOCKWASHER, INT TOOTH
9	4	NO. 4	LOCKWASHER, INT TOOTH
8	4	4-40 x 1/4	PBHMS
7	4	4-40 x 1/4	SHCS
6	1	51-712-001	FILTER, "SPECTRUM CONT" EQUIV
5	2	60-9959-050	CONN, COAX "AEP", EQUIV
4	1	23-0549	1200 MHz AMP PC BD ASSY
3	1	23-0553	COVER
2	1	23-0552	HOUSING
1	1	23-0554	1200 MHz AMP P/L

LIST OF MATERIALS

TOLERANCES
UNLESS OTHERWISE SPECIFIED
ALL DIMENSIONS APPLY AFTER FINISH
DECIMALS .xx = ± .010 .xxx = ± .005
ANGLES ± 1/2°
FRACTIONS ± 1/64
SURFACE ROUGHNESS 125 ✓
REMOVE ALL BURRS

DRAWN DATE 12-17-77
CHECKED DATE
APPROVED DATE 2/15/78

- IFR INC -
WICHITA, KANSAS

TITLE
1200 MHz AMPLIFIER ASSY

MATERIAL —
FINISH

SIZE C | PART NUMBER 3-23-0554 | REV B
SCALE 1:1 | WEIGHT | SHEET 1 OF 1

SOURCE | QTY | MODEL
NEXT ASSY | APPLICATION

NOTES:
1. SOLDER TO

Figure 6-27

DATE	REV	CHANGE	APP'L
1-7-78	A	INC ECN 2682 JAS	WW
1-16-78	A-1	INC ECN 2709 JAS	WW

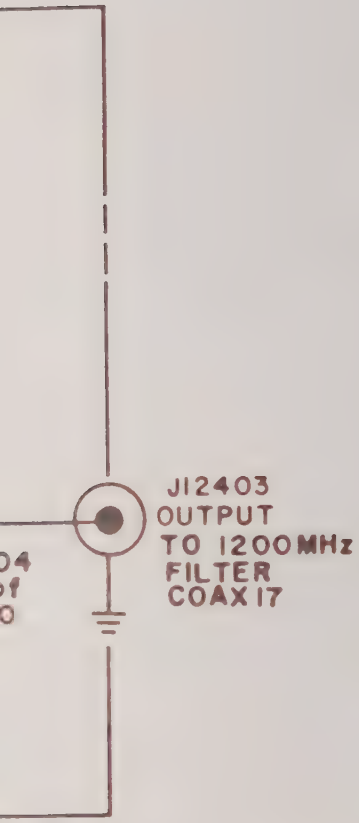

ITEM	REQ'D	PART NO.	DESCRIPTION
1	1	23-0548	SCHEMATIC

LIST OF MATERIALS

23-0549	1	1200A	
NEXT ASS'Y	QT'Y	MODEL	

APPLICATION

TOLERANCES
UNLESS OTHERWISE SPECIFIED
ALL DIMENSIONS APPLY AFTER FINISH
DECIMALS: xx = ± .010 xxx = ± .005
ANGLES ± 1/2°
FRACTIONS: ± 1/64
SURFACE ROUGHNESS 125 J
REMOVE ALL BURRS

DRAWN SSD DATE 5-5-76
CHECKED GHS DATE 5-10-76
APPROVED MW DATE 8 8 76

-IFR INC-
WICHITA, KANSAS

TITLE
1200MHz AMPLIFIER

MATERIAL —
FINISH —

SIZE B
PART NUMBER 2-23-0548
REV A-1
SCALE —
WEIGHT —
SHEET 1 OF 1

Figure 6-25

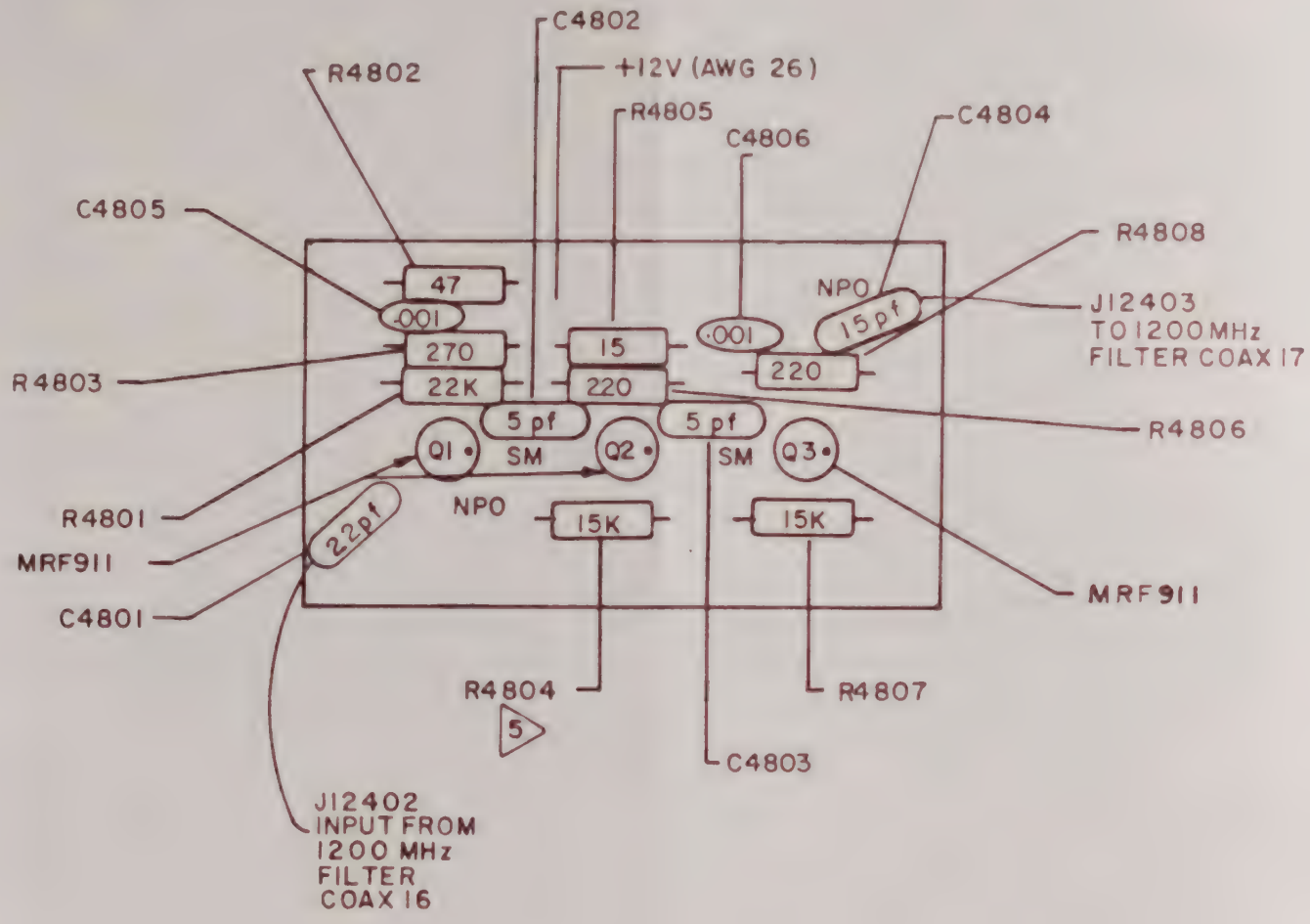

5 R4809 SAT PARALLELS R4804 AS REQ'D

4. MAXIMUM HEIGHT OF COMPONENTS FROM COMPONENT SIDE OF BOARD IS .35.

3. COMPONENT LEADS MAY EXTEND .04-.06 BEYOND BOTTOM OF BOARD AFTER SOLDERING

2. UNLESS OTHERWISE SPECIFIED:

   ALL CAPACITORS ARE IN uF

   ALL RESISTORS ARE 1/4W ±10%

1. REF DWG:

   PC BOARD 1-23-0547

   SCHEMATIC 2-23-0548

NOTES:

DATE	REV	CHANGE	APP'D
[illegible]	A	INITIAL RELEASE	[illegible]

NEXT ASS'Y	QT'Y	MODEL	ITEM	REQ'D	PART NO.	DESCRIPTION
23-0554	1	FM/AMI000S				
23-0554	1	FM/AMI000A	1	1	23-0549	ASSY P/L

APPLICATION

LIST OF MATERIALS

TOLERANCES
UNLESS OTHERWISE SPECIFIED
ALL DIMENSIONS APPLY AFTER FINISH
DECIMALS: ± .008
ANGLES: ± 1/2°
FRACTIONS: ± 1/64
SURFACE ROUGHNESS 125 ✓
REMOVE ALL BURRS

DRAWN DATE [illegible]
CHECKED DATE
APPROVED DATE

MATERIAL
TREATMENT
FINISH

INSTRUMENT FLIGHT RESEARCH CORPORATION
WICHITA, KANSAS

TITLE
1200 Mhz AMPLIFIER
PC BD ASSY

SIZE	PART NUMBER	REV
B	2-23-0549	A

SCALE | WEIGHT | SHEET 1 OF 1

Figure 6-26

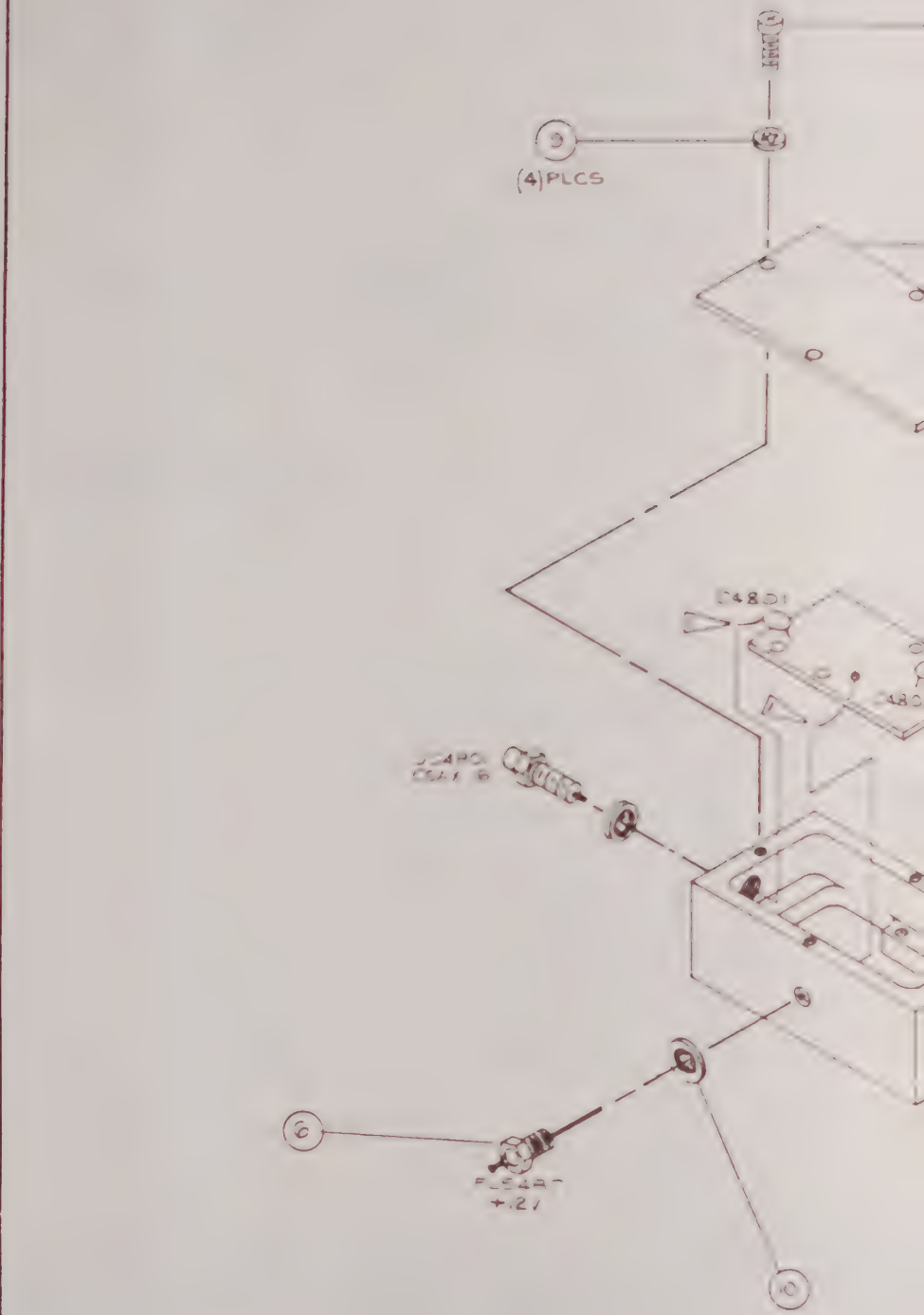

NOTES:

1. SOLDER TO CORRESPONDING CENTER CONDUCTOR

DATE	REV	CHANGE	APP'D
7-6-77	A	INC ECN# 2682 INIT RELEASE	
7-18	B	INC ECN# 2862	

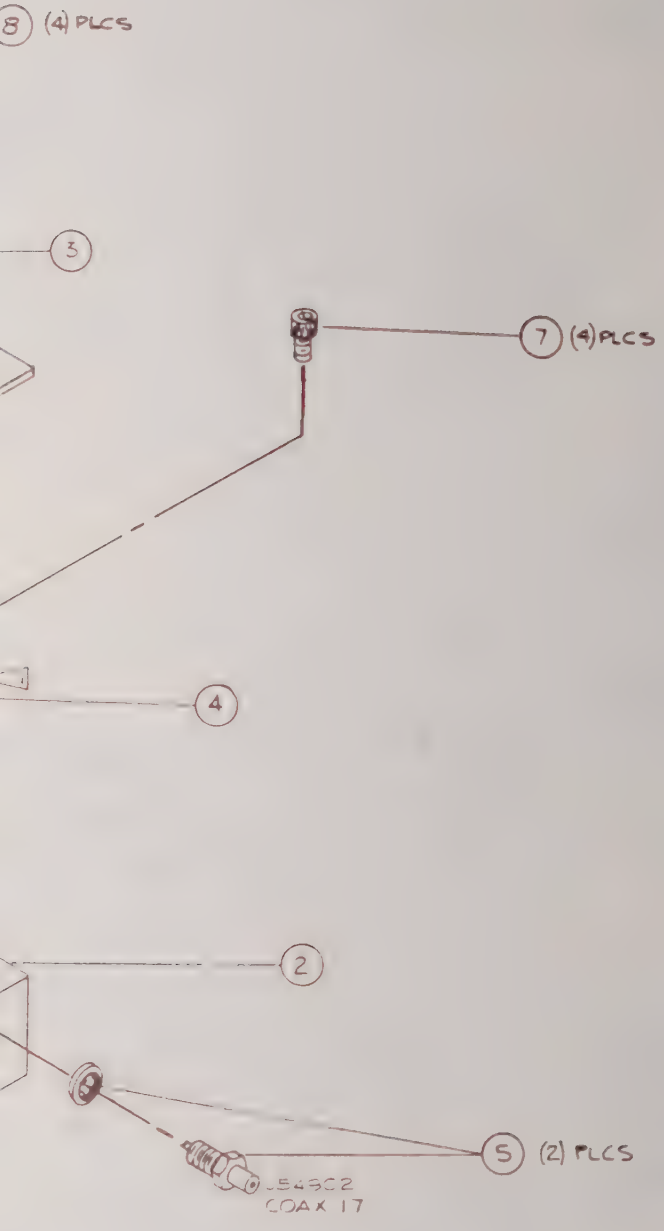

ITEM	REQ'D	PART NO	DESCRIPTION
10	1	NO 8	LOCKWASHER, INT TOOTH
9	4	NO. 4	LOCKWASHER, INT TOOTH
8	4	4-40 x 1/4	PBHMS
7	4	4-40 x 1/4	SHCS
6	1	51-712-001	FILTER, "SPECTRUM CONT /EQUIV
5	2	60-9939-[illegible]	CONN, COAX "AEP", EQUIV
4	1	23-0549	1200 MHz AMP PC BD ASSY
3	1	23-0553	COVER
2	1	23-0552	HOUSING
1	1	23-0554	1200 MHz AMP P/L

LIST OF MATERIALS

TOLERANCES
UNLESS OTHERWISE SPECIFIED
ALL DIMENSIONS APPLY AFTER FINISH
DECIMALS .XX ± .010 .XXX ± .005
ANGLES ± 1/2°
FRACTIONS ± 1/64
SURFACE ROUGHNESS 125 ✓
REMOVE ALL BURRS

MATERIAL
FINISH

DRAWN 12-17-77
CHECKED
APPROVED 3/15/78

- IFR INC -
WICHITA, KANSAS

TITLE: 1200 MHz AMPLIFIER ASSY

SIZE C | PART NUMBER 3-23-0554 | REV B
SCALE 1:1 | WEIGHT | SHEET 1 OF 1

NEXT ASSY 23-0492 | QTY 1 | APPLICATION | MODEL 1200 A/S

Figure 6-27

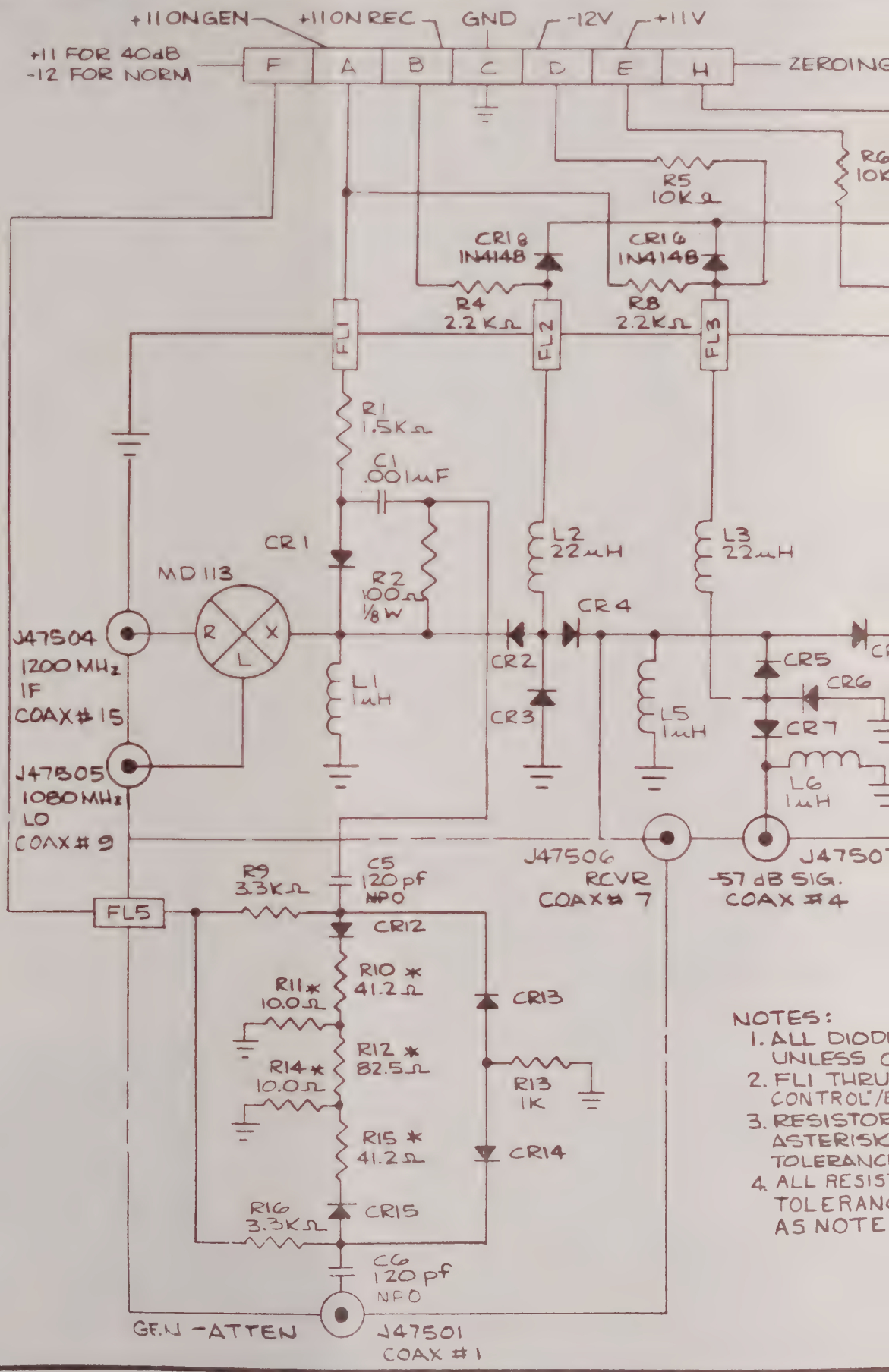

NOTES:

1. ALL DIOD
UNLESS
2. FL1 THRU
CONTROL"/
3. RESISTOR
ASTERISK
TOLERANC
4. ALL RESIS
TOLERAN
AS NOTE

DATE	REV	CHANGE	APP'D
2-4-76	A	INCORP ECN # 1271 SSD	
12-7-77	B	INC ECN # 2581 JAS	
5-23-78	C	INC ECN 2709 JAS	
9-5-78	D	INC ECN 2722 JAS	

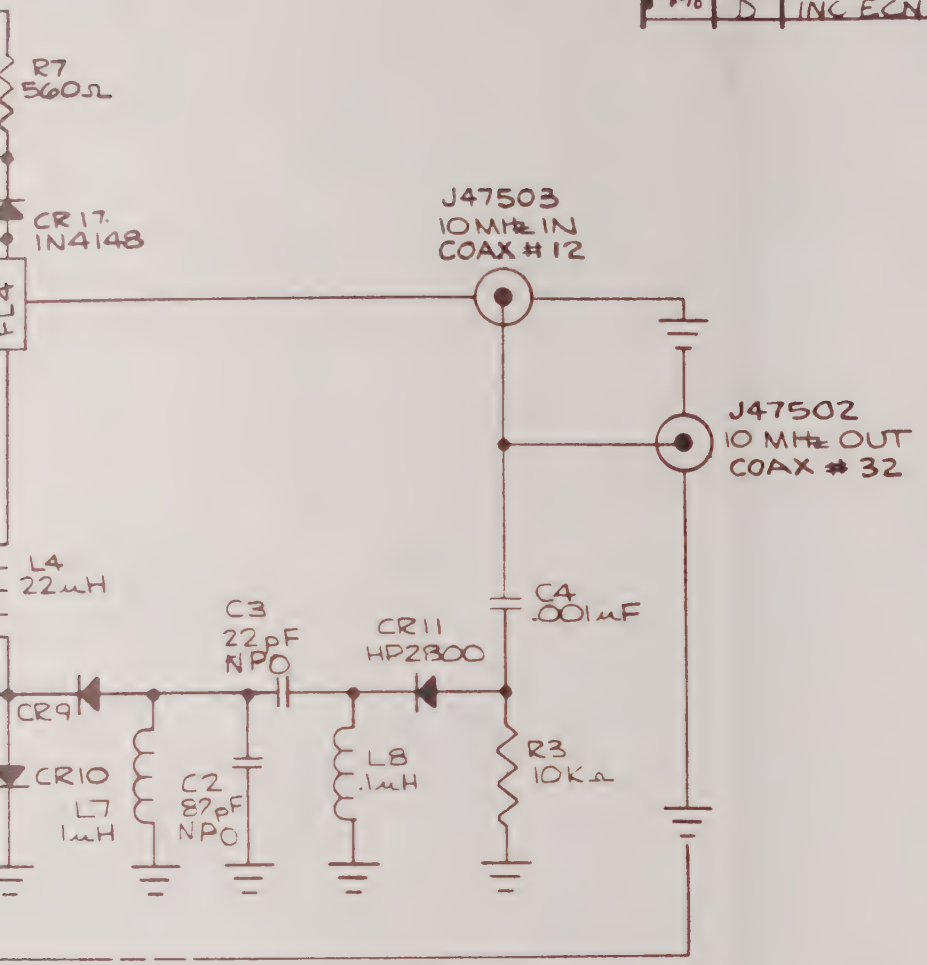

...E MA47047
...RWISE SPECIFIED
... ARE "SPECTRUM
...51-712-001 FEEDTHRUS
...ARKED WITH
...ARE ±1%

... ARE 10%
...R 1/4 W EXCEPT

NEXT ASS'Y	QT'Y	MODEL	ITEM	REQ'D	PART NO.	DESCRIPTION
23-0462	1	FM/AM-1000/A	1	1	23-0475	SCHEMATIC

APPLICATION

LIST OF MATERIALS

TOLERANCES
UNLESS OTHERWISE SPECIFIED
ALL DIMENSIONS APPLY AFTER FINISH
DECIMALS: ± .005
ANGLES: ± 1/2°
FRACTIONS: ± 1/64
SURFACE ROUGHNESS 125 ✓
REMOVE ALL BURRS

DRAWN JNV DATE 10-29-75
CHECKED DATE
APPROVED DATE MO 2776

INSTRUMENT FLIGHT RESEARCH CORPORATION
WICHITA, KANSAS

TITLE
SECOND MIXER-DIODE SWITCH
SCHEMATIC
FM/AM-1000/A

MATERIAL
TREATMENT
FINISH

SIZE	PART NUMBER	REV
B	2-23-0475	D

SCALE
WEIGHT
SHEET 1 OF 1

Figure 6-28

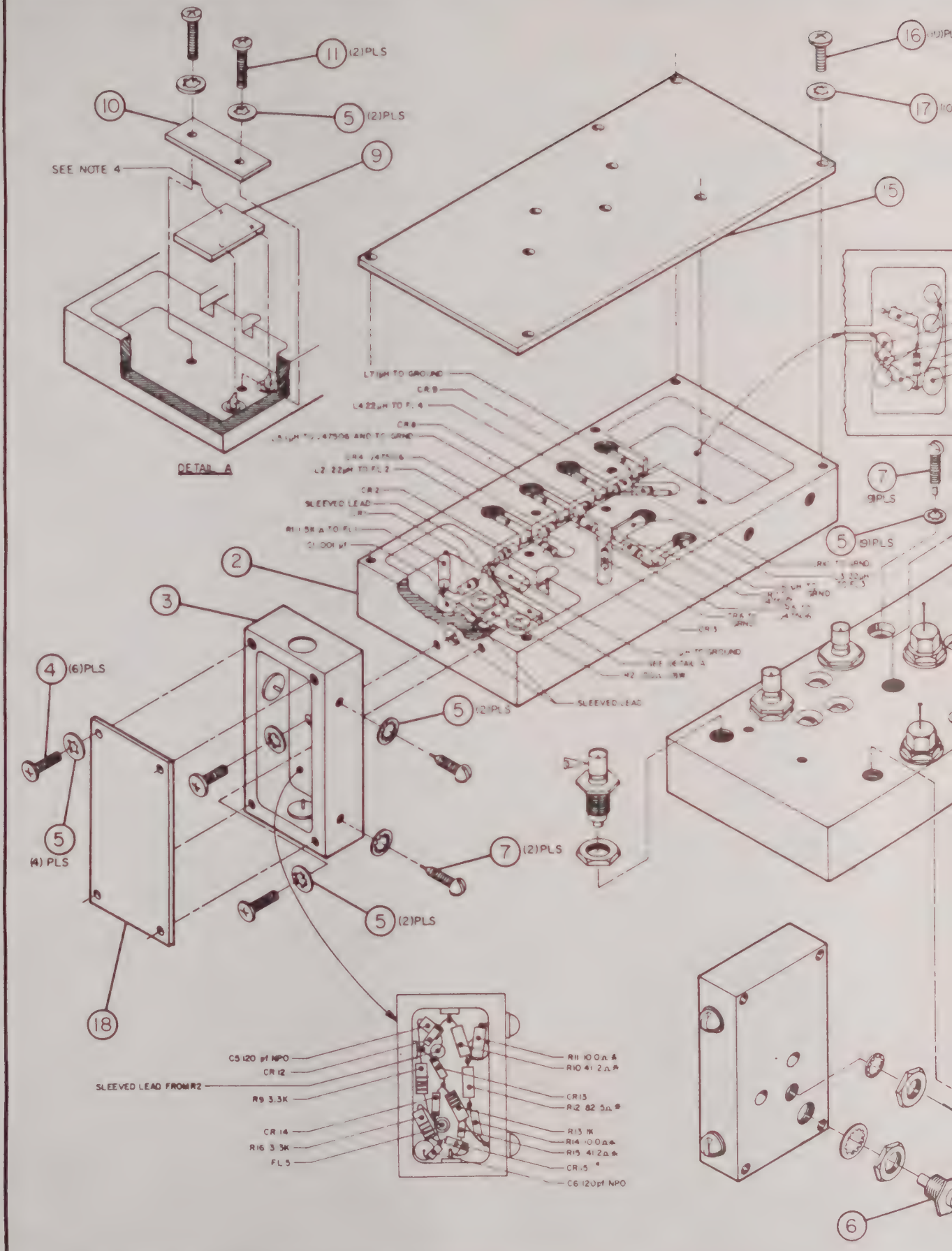
11 (2)PLS
10
5 (2)PLS
SEE NOTE 4
9
DETAIL A
16
17
15
7
9PLS
5 (9)PLS
2
3
4 (6)PLS
5 (2)PLS
SLEEVED LEAD
5
(4) PLS
7 (2)PLS
5 (2)PLS
18
C5 120 pf NPO
CR 12
SLEEVED LEAD FROM R2
R9 3.3K
CR 14
R16 3.3K
FL 5
R11 10 Ω Δ
R10 41.2Ω Δ
CR 13
R12 82.5Ω Δ
R13 1K
R14 100Ω Δ
R15 41.2Ω Δ
CR 15
C6 120pf NPO
6

DATE	REV	CHANGE	APP'D
1-12-77	E	ORIGINAL RELEASE TJT	
5-17-77	F	INC ECN 2722 JAJ	

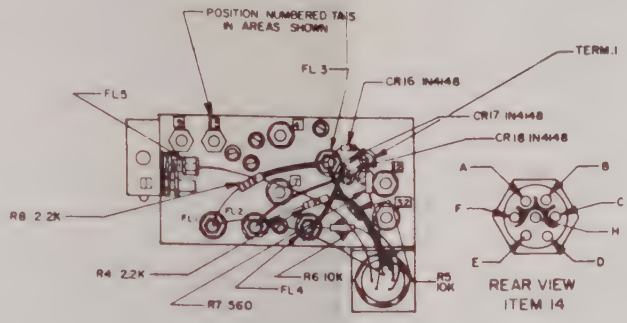

L8 .1μM TO GROUND
C2 82pf NPO TO GROUND
C3 22pf NPO
CR11 HP2800
R3 10K TO GROUND
C4 .001μf TO J47503 AND J47502

COAX CONN INFORMATION		
COAX #	CONNECTOR #	FUNCTION
1	J47501	GEN - ATTEN.
4	J47507	-57 dB SIG.
9	J47803	1080 MHz LO
7	J47508	RECIEVER
12	J47503	0 MHz IN
15	J47504	1200 MHz IF
32	J47502	10 MHz OUT

ITEM 14 WIRING LIST						
ITEM	TO	FROM	COLOR	LGTH	GA	FUNCTION
1	P18-D	FL 3	RED/WHITE	1.75	26	+12V INPUT
2	P18-E	R8	VIOLET	"	"	TONE OUTPUT
3	P18-F	FL8	WHITE	4.25	"	12V FOR NORM
4	P18-H	R7	BLUE/WHITE	1.87	"	+5V INPUT
5	P18-C	GRND LUG	BLACK	.50	"	GROUND
7	P18-B	R4	BLACK/RED	2.0	"	+11V ON REC
8	P18-A	FL1	YELLOW	3.75	"	+11V ON GEN
9	FL1	FL5	BLUE/WHITE LEADS	—	—	R8 2.2K
10	FL3	TERM 1	"	—	—	CR16 IN4148
11	FL4	"	"	—	—	CR18 "
12	FL2	"	"	—	—	CR17 "
13	FL4	P18-E	"	—	—	R6 10K
14	FL5	P18-D	—	—	—	R5 10K
15	R7	TERM 1	BARE LEAD	—	—	———

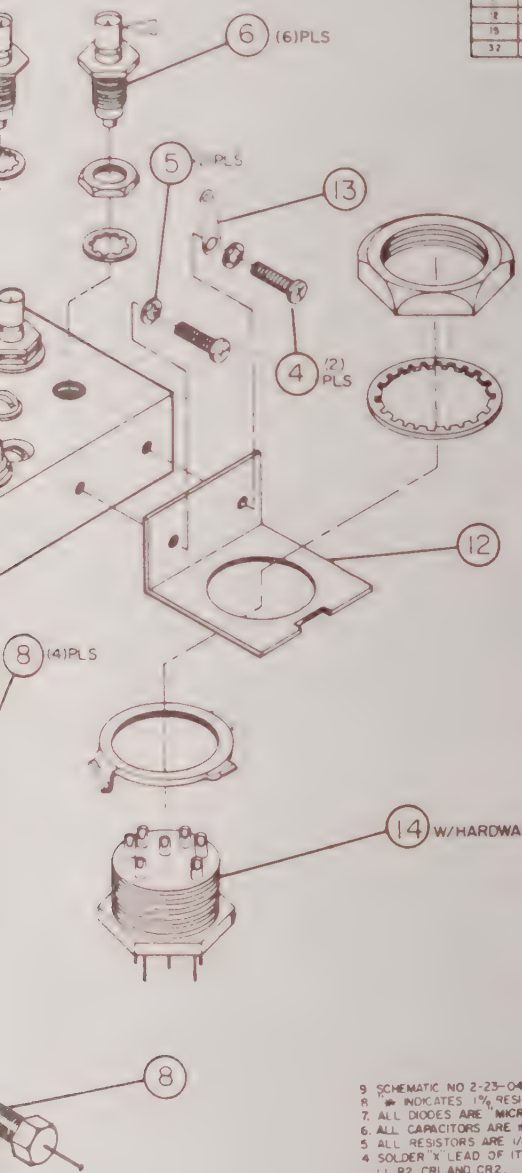

18	1	1-23-0830	COVER, 40dB BOOSTER
17	10	#4	INT TOOTH LOCKWASHER
16	10	#4-40 x 1/4	PBHMS
15	1	2-23-0481	COVER
14	1	M7PLRN	"WINCHESTER"/EQUIV (7)PIN MALE CONNECTOR
13	1	118	"TERMINAL"/EQUIV #2 GROUND LUG
12	1	1-23-0469	CONNECTOR MOUNTING BRACKET
11	2	#2-56 x 3/16	PBHMS
10	1	1-23-0384	MIXER CLAMP
9	1	MD-113	"ANZAC"/EQUIV MIXER
8	3	84-712-001	"SPECTRUM CONTROL"/EQUIV FEEDTHRU FILTER
7	11	229-5002	"SEALECTRO"/EQUIV THREADED GROUND TERM.
6	7	17-021B-000	"AEP"/EQUIV SMB MALE CONNECTOR
5	21	#2	INT TOOTH LOCKWASHER
4	8	#2-56 x 1/4	PBHMS
3	1	2-23-0829	BLOCK, 40dB BOOSTER
2	1	3-23-0460	SECOND MIXER BLOCK
1	1	4-23-0462	SECOND MIXER DIODE SWITCH ASSEMBLY
ITEM	REQ'D	PART NO	DESCRIPTION

LIST OF MATERIALS

9 SCHEMATIC NO 2-23-0475
8 # INDICATES 1% RESISTORS
7. ALL DIODES ARE "MICROWAVE ASSO."/EQUIV BMA47047 EXCEPT AS NOTED.
6. ALL CAPACITORS ARE IN μf EXCEPT AS NOTED
5 ALL RESISTORS ARE 1/4W, 10% TOL. EXCEPT AS NOTED.
4 SOLDER "X" LEAD OF ITEM 9 MIXER TO JUNCTION OF L1, R2, CR1, AND CR2.
▷ INDICATES ASSEMBLY DETAIL OF ITEM 6 FOR CONNECTORS J47504 AND J47505.
▷ INDICATES ASSEMBLY DETAIL OF ITEM 6 FOR CONNECTORS J47506 AND J47507.
▷ INDICATES ASSEMBLY DETAIL OF ITEM 6 FOR CONNECTOR J47501, J47503, AND J47502.

NOTES

NEXT ASSY	USED ON	APPLICATION
23-0644	1	
23-0382	1	

TOLERANCES
UNLESS OTHERWISE SPECIFIED
ALL DIMENSIONS APPLY BEFORE FINISH
DECIMALS .XX = ± .010 .XXX = ± .005
ANGLES ±1°
FINISH ... 63
BREAK ALL SHARP EDGES .03 MAX
REMOVE ALL BURRS

DRAWN Tom Peck DATE 1-12-77
CHECKED DATE
APPROVED DATE 1/24/77
MFG 1-18-77

SEE L/M

- IFR INC -
WICHITA, KANSAS

TITLE
SECOND MIXER - DIODE SWITCH ASSEMBLY

SIZE D | PART NUMBER 4-23-0462 | REV F

SCALE 2=1 | WEIGHT | SHEET 1 OF 1

Figure 6-29

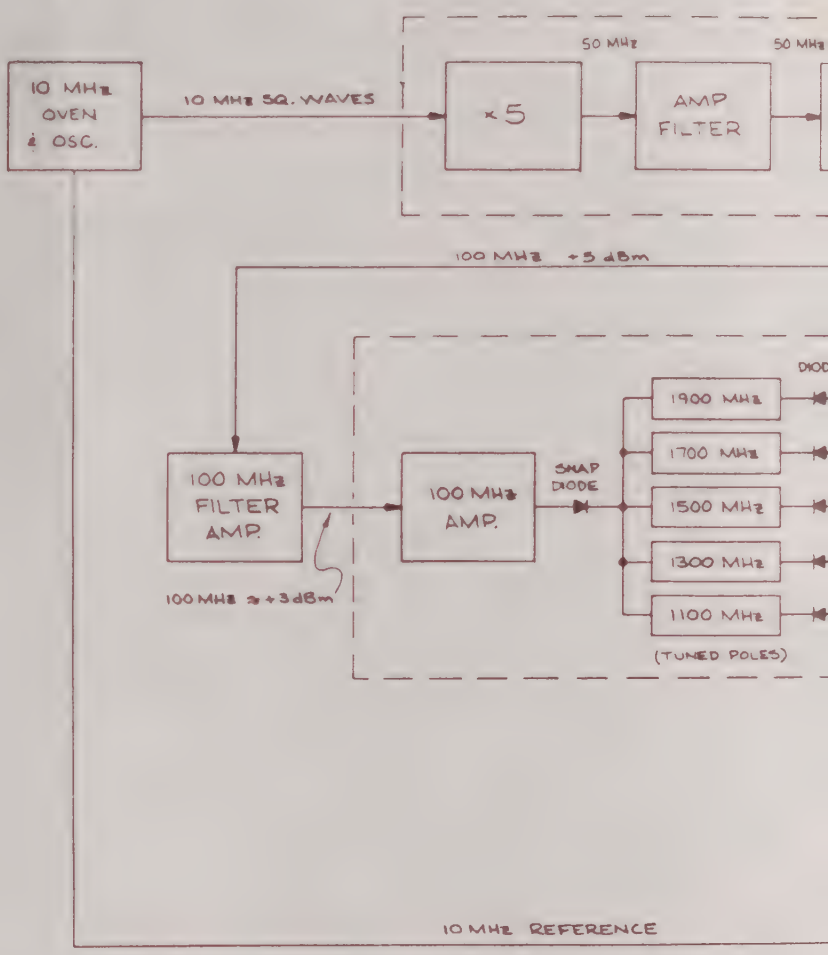
10 MHz OVEN & OSC.
10 MHz SQ. WAVES
×5
50 MHz
AMP FILTER
50 MHz
100 MHz +5 dBm
100 MHz FILTER AMP.
100 MHz AMP.
SNAP DIODE
1900 MHz
1700 MHz
1500 MHz
1300 MHz
1100 MHz
(TUNED POLES)
100 MHz ≥ +3dBm
10 MHz REFERENCE

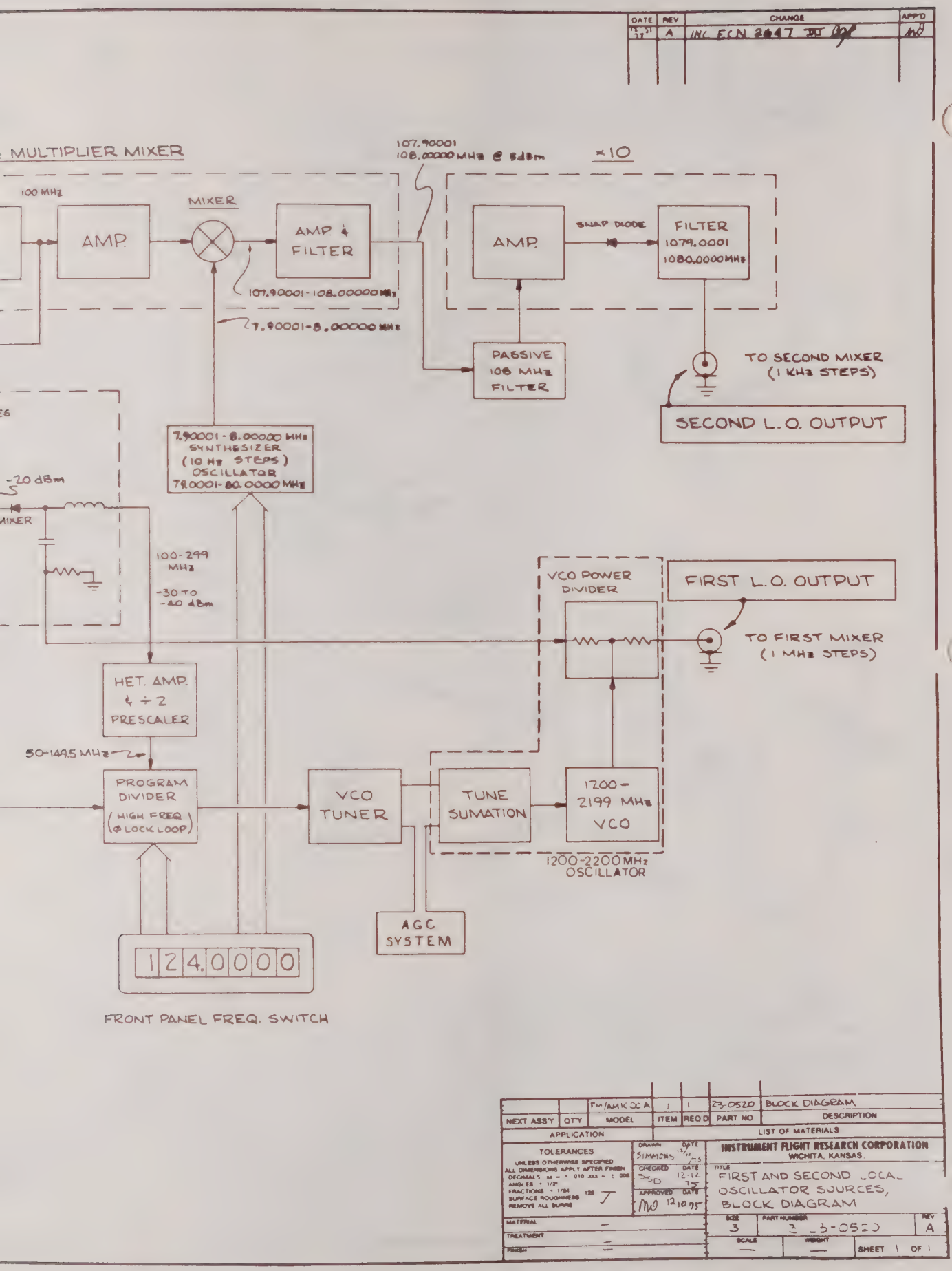
DATE
REV
CHANGE
APPD
A
INC ECN 2647
MULTIPLIER MIXER
107.90001
108.00000 MHz @ 5dBm
×10
100 MHz
MIXER
AMP.
AMP. & FILTER
107.90001-108.00000 MHz
7.90001-8.00000 MHz
AMP.
SNAP DIODE
FILTER
1079.0001
1080.0000 MHz
PASSIVE
108 MHz
FILTER
TO SECOND MIXER
(1 KHz STEPS)
SECOND L.O. OUTPUT
7.90001-8.00000 MHz
SYNTHESIZER
(10 Hz STEPS)
OSCILLATOR
79.0001-80.0000 MHz
-20 dBm
MIXER
100-299
MHz
-30 TO
-40 dBm
VCO POWER
DIVIDER
FIRST L.O. OUTPUT
TO FIRST MIXER
(1 MHz STEPS)
HET. AMP.
& ÷2
PRESCALER
50-149.5 MHz
PROGRAM
DIVIDER
(HIGH FREQ.
ϕ LOCK LOOP)
VCO
TUNER
TUNE
SUMATION
1200-
2199 MHz
VCO
1200-2200 MHz
OSCILLATOR
AGC
SYSTEM
1 2 4 0 0 0 0
FRONT PANEL FREQ. SWITCH
NEXT ASSY
QTY
MODEL
ITEM
REQ'D
PART NO
DESCRIPTION
FM/AM/CW A
1
1
23-0520
BLOCK DIAGRAM
APPLICATION
LIST OF MATERIALS
TOLERANCES
UNLESS OTHERWISE SPECIFIED
ALL DIMENSIONS APPLY AFTER FINISH
DECIMALS
ANGLES
FRACTIONS
SURFACE ROUGHNESS
REMOVE ALL BURRS
DRAWN
SIMMONS
CHECKED
APPROVED
MATERIAL
TREATMENT
FINISH
INSTRUMENT FLIGHT RESEARCH CORPORATION
WICHITA, KANSAS
TITLE
FIRST AND SECOND LOCAL OSCILLATOR SOURCES, BLOCK DIAGRAM
SIZE
3
PART NUMBER
3-3-0520
REV
A
SCALE
WEIGHT
SHEET 1 OF 1

Figure 6-30

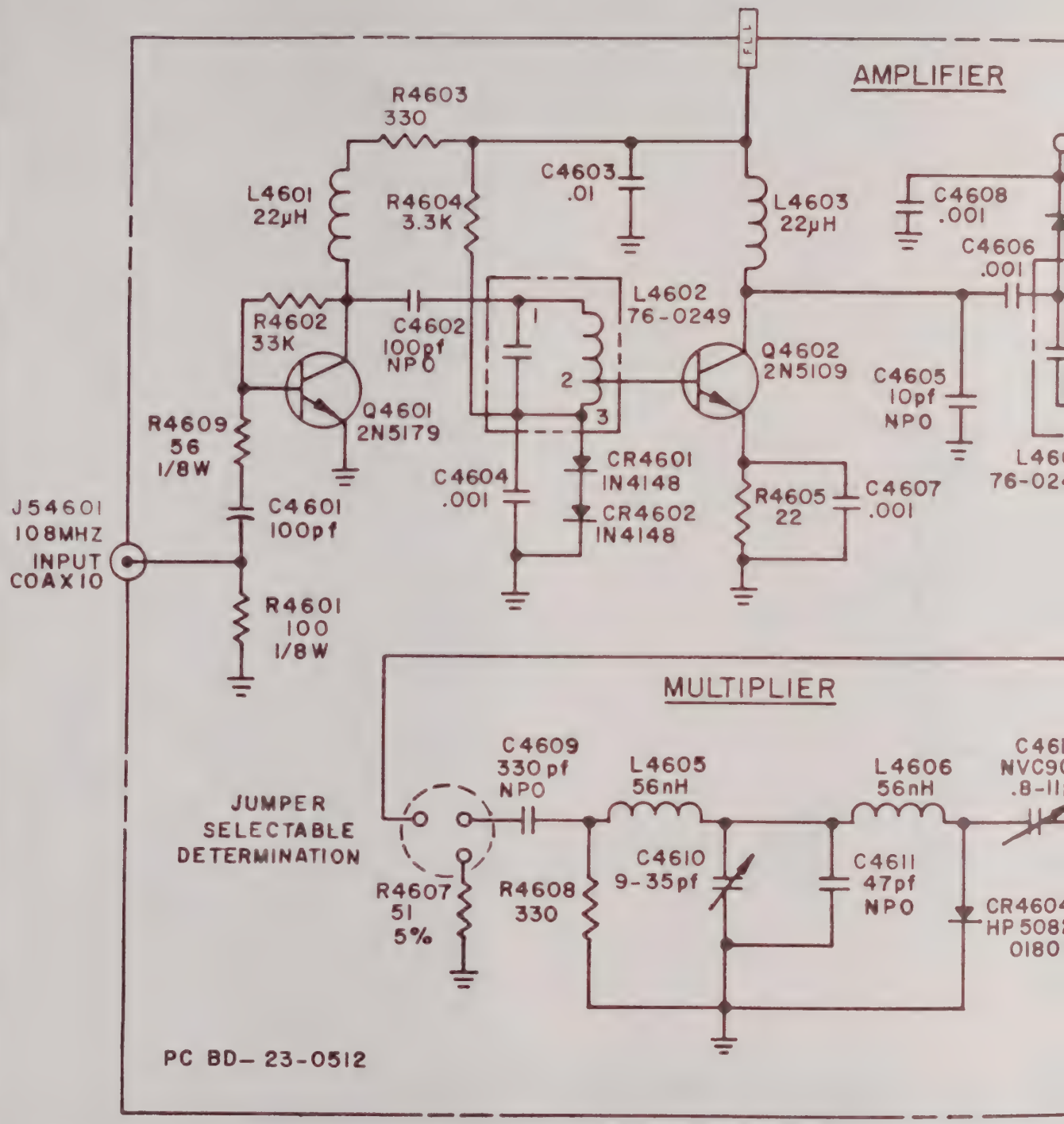

NOTES:

1. RESISTORS ARE 1/4 W, 10%, AND VALUES ARE IN OHMS UNLESS OTHERWI
2. CAPACITORS ARE IN MICROFARADS UNLESS OTHERWISE SPECIFIED.
3. LAST NUMBERS USED: R4609, C4612, CR4604, L4606, Q4602, TP460

DATE	REV	CHANGE	APP'D
11 18 76	A	ADDED OUTPUT TUNELINE MJ WW	MJ
12-16-76	B	ADDED INPUT, TUNELINE NOMENCLATURE, ECN #1792 WW	MJ
11-29-77	C	ECN# 2598 JAJ	
1-17-78	D	ECN 2709 —	

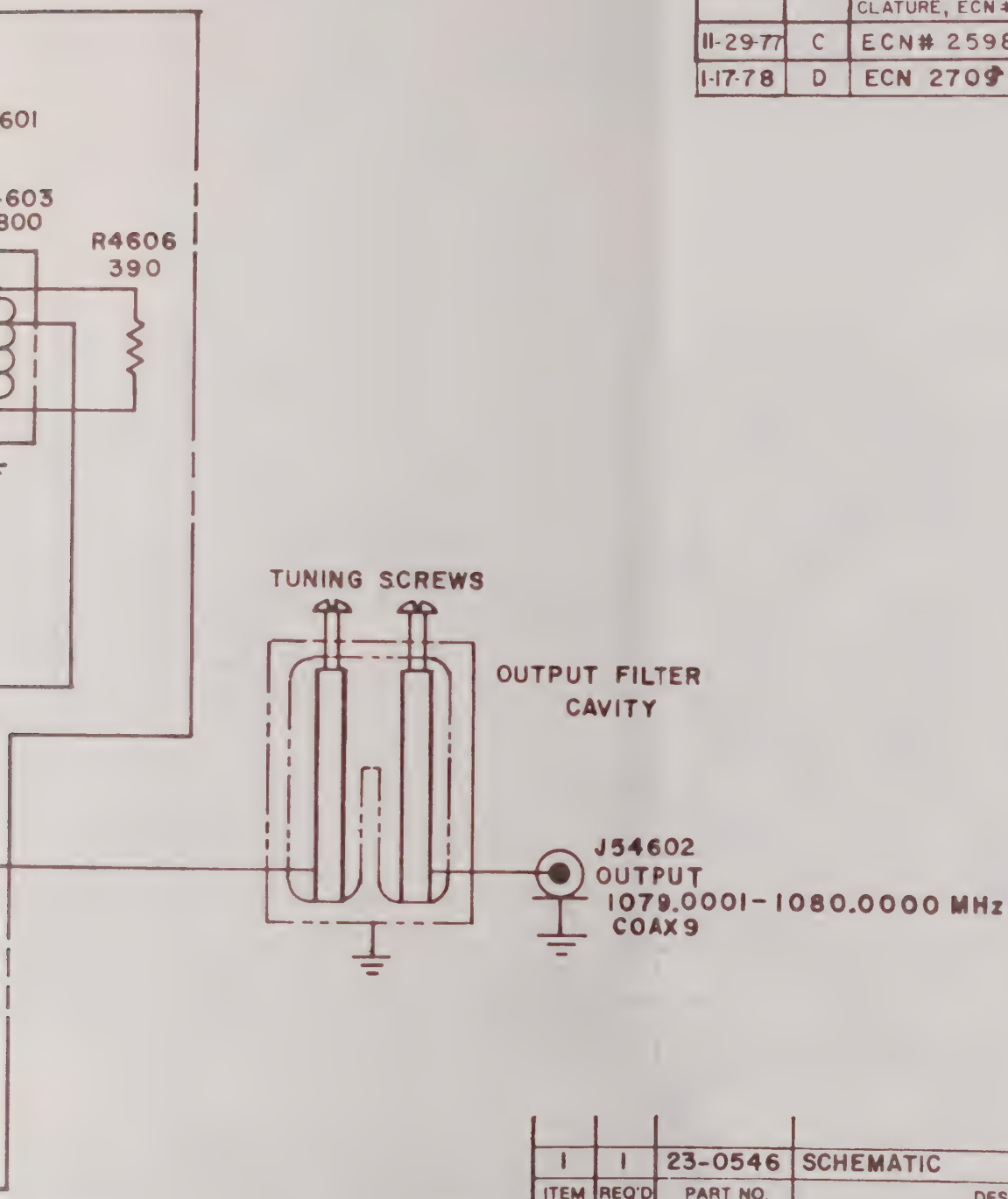

PECIFIED.

ITEM	REQ'D	PART NO.	DESCRIPTION
1	1	23-0546	SCHEMATIC

LIST OF MATERIALS

23-0513	1	PM-AM 1000A	MODEL
NEXT ASS'Y	QT'Y		

APPLICATION

TOLERANCES
UNLESS OTHERWISE SPECIFIED
ALL DIMENSIONS APPLY AFTER FINISH
DECIMALS: xx = ± .010 .xxx = ± .005
ANGLES: ± 1/2°
FRACTIONS: ± 1/64
SURFACE ROUGHNESS 125 J
REMOVE ALL BURRS

DRAWN SSD DATE 4-23-76
CHECKED H.S. DATE 4-26-76
APPROVED MJ DATE 7-23-76

MATERIAL —
FINISH —

-IFR INC-
WICHITA, KANSAS

TITLE
1080 MHz MULTIPLIER AMPLIFIER

SIZE B | PART NUMBER 2-23-0546 | REV D
SCALE | WEIGHT | SHEET 1 OF 1

Figure 6-31

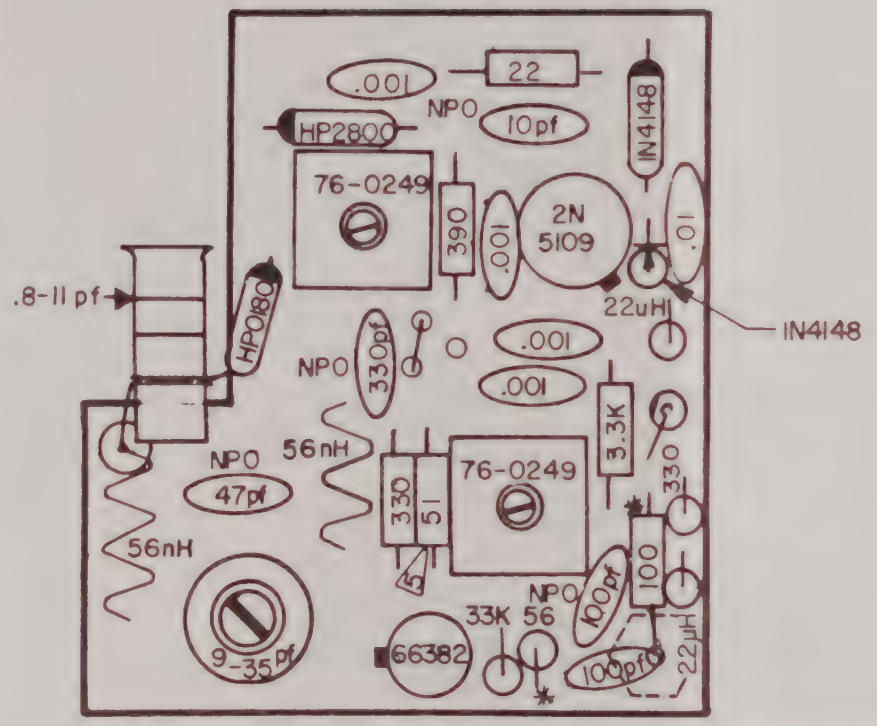

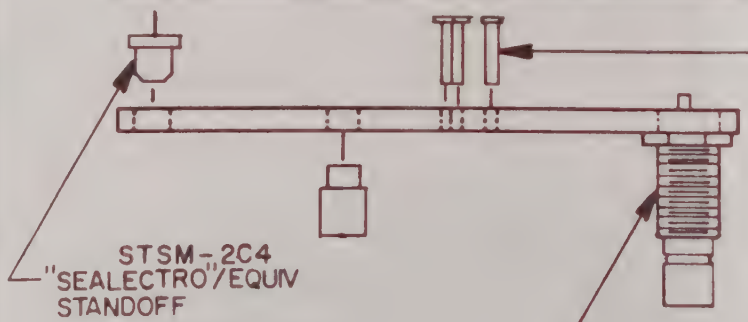

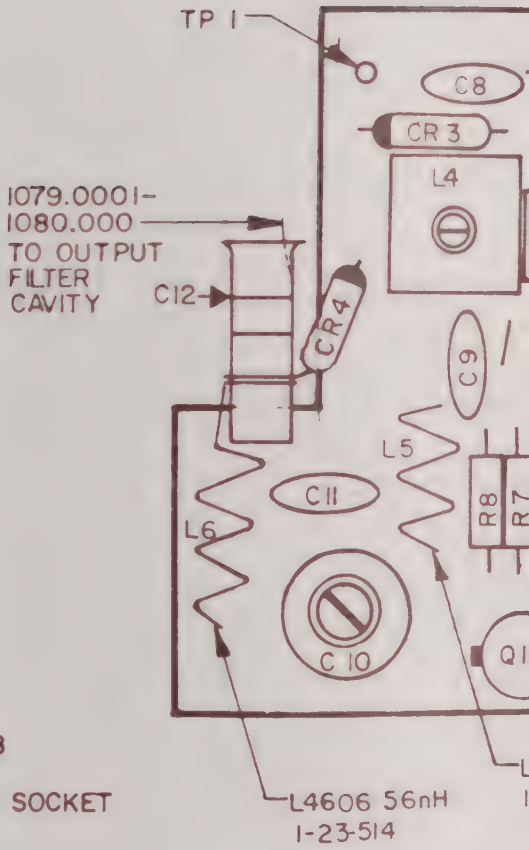

9 PC BOARD NO. 1-23-512
8 SCHEMATIC NO. 2-23-546
7 COMPONENT DESIGNATORS HAVE 46
C4601. L4601 etc.

6 "*" DENOTES 1/8W, 10% RES.
5 R7 IS 51 OHM, 1/4W, 5% RES.
4 MAX. HEIGHT OF COMPONENTS TO BE .
COMPONENT SIDE OF BOARD.
3 COMPONENT LEADS MAY EXTEND .04
BOTTOM OF BOARD AFTER SOLDERING
2 ALL CAPACITORS ARE IN µf EXCEPT AS
1 ALL RESISTORS ARE 1/4W, 10% TOL. EX
NOTES

DATE	REV	CHANGE	APP'D
11-9-77	D	ORIGINAL RELEASE TT	
1-17-78	D-1	INC ECN 2709 JAS	
6-29-79	D-2	INC ECN# 3050	

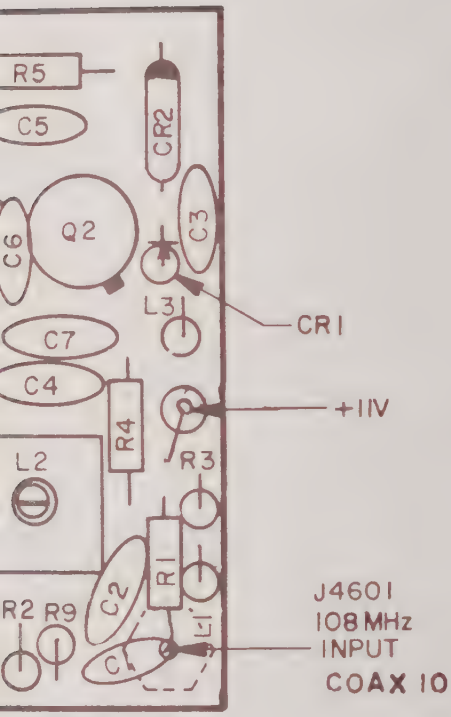

05 56nH
-514

EFIX i.e. R4601,

FROM

.06 BEYOND

TED.
PT AS NOTED.

23-516	1	FM/AM1000A/S				
NEXT ASS'Y	QT'Y	MODEL	ITEM	REQ'D	PART NO.	DESCRIPTION
APPLICATION			LIST OF MATERIALS			

TOLERANCES
UNLESS OTHERWISE SPECIFIED
ALL DIMENSIONS APPLY AFTER FINISH
DECIMALS: ± .008
ANGLES: ± 1/2°
FRACTIONS ± 1/64
SURFACE ROUGHNESS 128
REMOVE ALL BURRS

DRAWN TenEyck DATE 11-9-77
CHECKED DATE
APPROVED DATE

INSTRUMENT FLIGHT RESEARCH CORPORATION
WICHITA, KANSAS

TITLE
1080MHz MULTIPLIER AMPLIFIER
PC BOARD ASSEMBLY

MATERIAL
TREATMENT
FINISH

SIZE	PART NUMBER	REV
B	2-23-513	D-2
SCALE 2:1	WEIGHT —	SHEET 1 OF 1

Figure 6-32

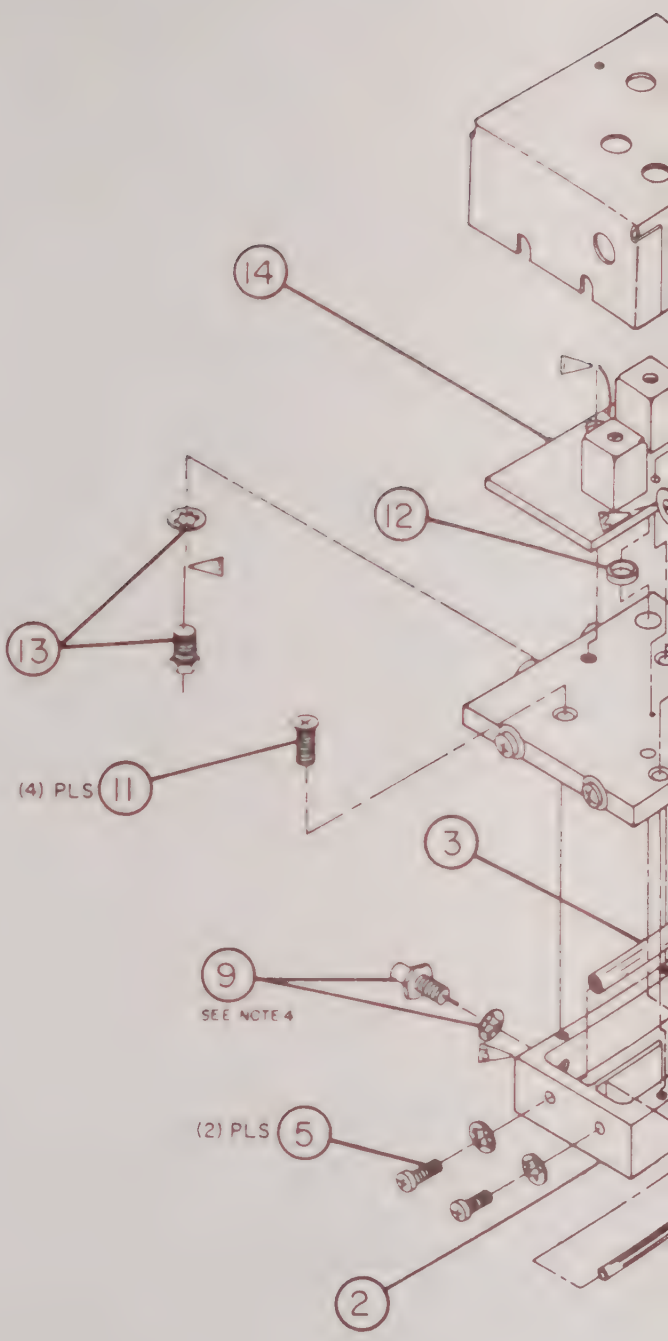
14
12
13
(4) PLS 11
3
9
SEE NOTE 4
(2) PLS 5
2

11-15-77 A ORIGINAL RELEASE

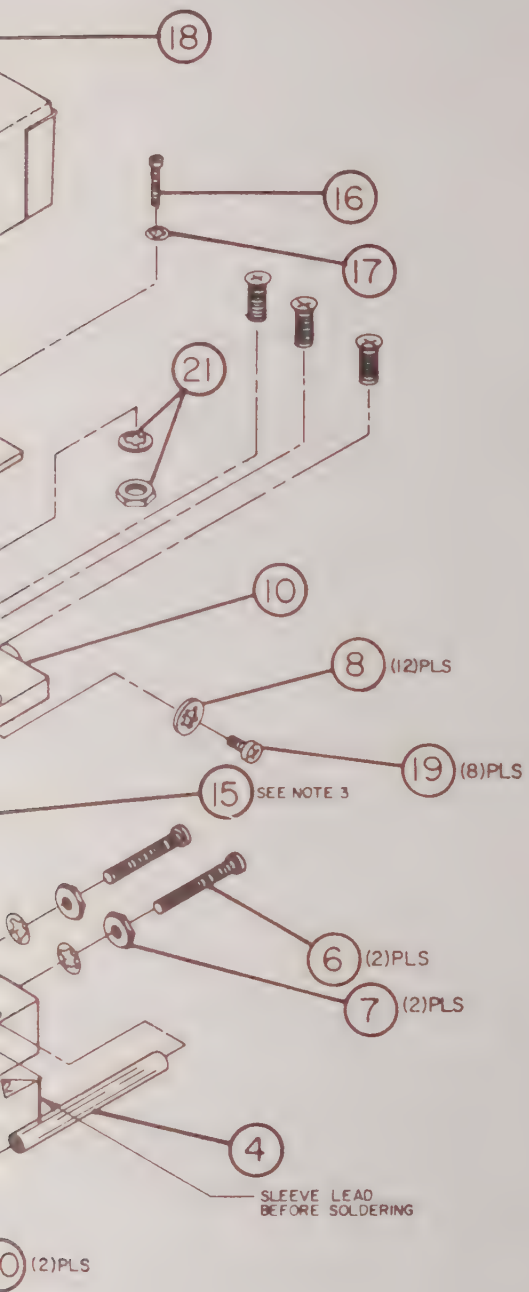

ITEM	REQ'D	PART NO	DESCRIPTION
21	1	———	ITEM 21 PART OF ITEM 14 CONNECTOR HARDWARE
20	2	PCV105/10	"ALPHA"/EQUIV 10GA TUBING
19	8	4-40 x 3/16	PBHMS
18	1	3-23-0518	COVER, 1080 MHz MULTIPLIER PC BOARD
17	1	#2	INT TOOTH LOCKWASHER
16	1	#2-56 x 3/8	PBHMS
15	1	#10-32	EXTRA SMALL PATTERN HEX NUT
14	1	1-23-0513	1080MHz MULTIPLIER PC BOARD ASSEMBLY
13	1	51-712-001	"SPECTRUM CONTROLS"/EQUIV FILTER
12	1	2-78-0001-54	SPACER
11	4	4-40x3/8	PFHMS
10	1	2-23-0517	MOUNTING PLATE 1080 MHz MULTIPLIER PC BD
9	1	17-0219-000	"AEP"/EQUIV SMB MALE CONNECTOR
8	12	#4	INT TOOTH LOCKWASHER
7	2	#4-40	LARGE PATTERN HEX NUT
6	2	#4-40x3/4	PBHMS
5	2	#4-40x3/8	PBHMS
4	1	1-23-0515	TUNING POLE
3	1	1-08-0081	TUNING POLE
2	1	2-08-0100-2	OSCILLATOR MULTIPLIER BLOCK
1	1	3-23-0516	1080 MHz MULTIPLIER ASSEMBLY

LIST OF MATERIALS

5. PLACE NO. 10 ON ITEM 18 COVER NEAR SCREW INDICATED BY 4
3. PLACE NO. "9" DECAL NEAR ITEM 9 CONNECTOR ON ITEM 2 BLK.
4. ITEM 9 IS SOLDERD INTO ITEM 3 AFTER ITEM 3 IS INSTALLED.
3. ITEM 15 NUT SCREWS TO ITEM 16 SCREW AS INDICATED.
2. SOLDER ITEM 4 LEAD TO ITEM 14 LEAD AS INDICATED BY 2
1. SOLDER ITEM 13 LEAD TO ITEM 14 LEAD AS INDICATED BY 1.

NOTES:

TOLERANCES UNLESS OTHERWISE SPECIFIED

DRAWN TenEyck DATE 11-15-77

CHECKED DATE 11-21-77

APPROVED DATE 11-15-77

MATERIAL SEE L/M

IFR INC - WICHITA KANSAS

TITLE 1080MHz MULTIPLIER ASSEMBLY

SIZE C PART NUMBER 3-23-0516 REV A

SCALE 1:1 WEIGHT SHEET 1 OF 1

23-0641 NEXT ASS. APP. MODEL

Figure 6-33

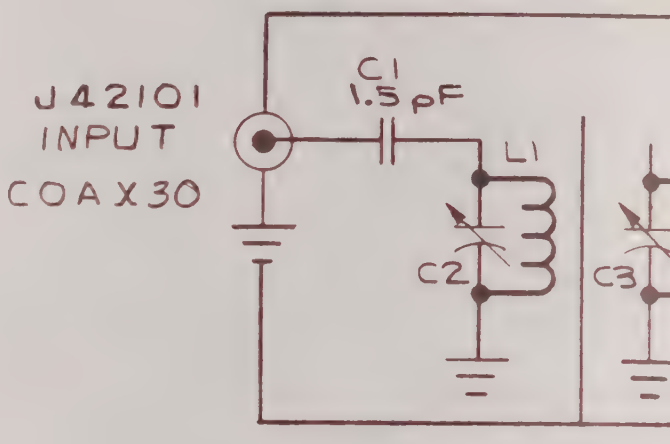

NOTES:

1. C2 THRU C5 ARE VK200 "JFD"/EQUIV. TRIMMER CAPS.
2. L1 THRU L4 ARE 9 TURNS #22 GUAGE ENAMEL COATED COPPER WIRE WOUND ON 7/16 DIA. COIL FORMS PLACED ARO C2 THRU C5.

DATE	REV	CHANGE	APP'D
1-17-78	A	INC ECN 2709 JAS	WW

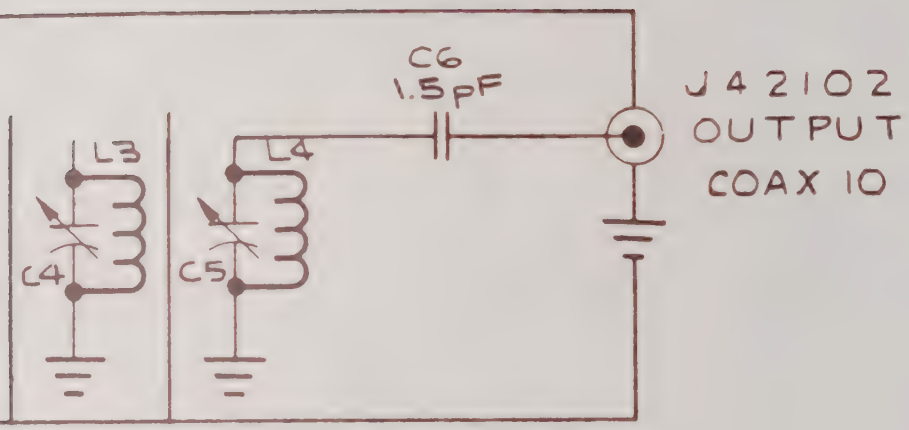

NEXT ASS'Y	QT'Y	MODEL	ITEM	REQ'D	PART NO.	DESCRIPTION
	1	FM/AM-1000	1	1	23-0421	108 MHz FILTER SCHEM.

APPLICATION

LIST OF MATERIALS

TOLERANCES
UNLESS OTHERWISE SPECIFIED
ALL DIMENSIONS APPLY AFTER FINISH
DECIMALS: .xx = ± .010 .xxx = ± .005
ANGLES: ± 1/2°
FRACTIONS: ± 1/64
SURFACE ROUGHNESS 125
REMOVE ALL BURRS

DRAWN JNV DATE 5/21/75
CHECKED DATE
APPROVED DATE

INSTRUMENT FLIGHT RESEARCH CORPORATION
WICHITA, KANSAS.

TITLE
108 MHz FILTER
SCHEMATIC
FM/AM-1000

MATERIAL —
TREATMENT —
FINISH —

SIZE | PART NUMBER 1-23-0421 | REV A

SCALE — | WEIGHT — | SHEET 1 OF 1

Figure 6-34

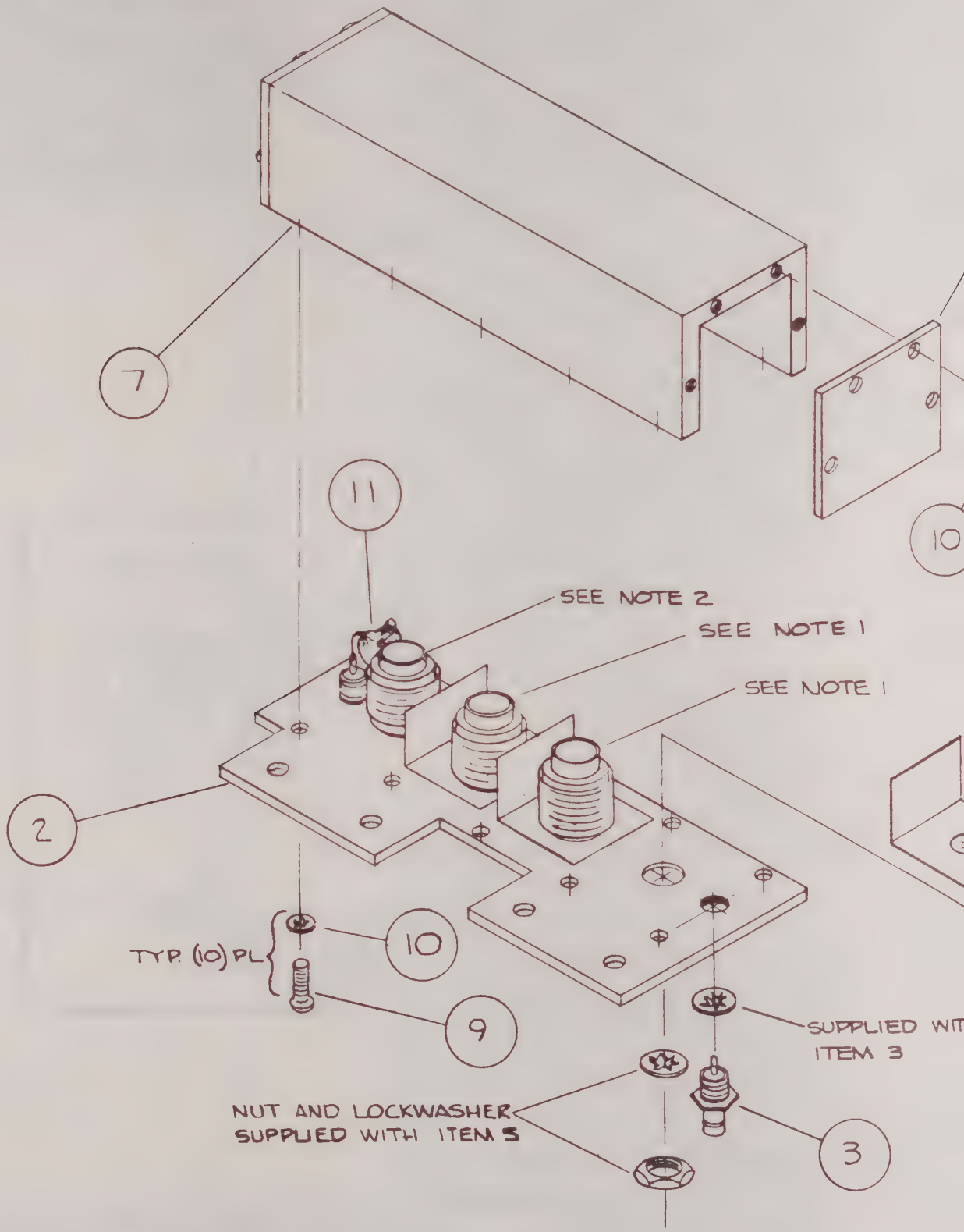
7
11
10
SEE NOTE 2
SEE NOTE 1
SEE NOTE 1
2
TYP. (10) PL
10
9
SUPPLIED WIT
ITEM 3
NUT AND LOCKWASHER
SUPPLIED WITH ITEM 5
3

DATE	REV	CHANGE	APP'D
8/30/75	A	INCORP ECN # 729 JNV DLP	MLS
10/12/77	B	INCORP. ECN # 2483 LC	MO

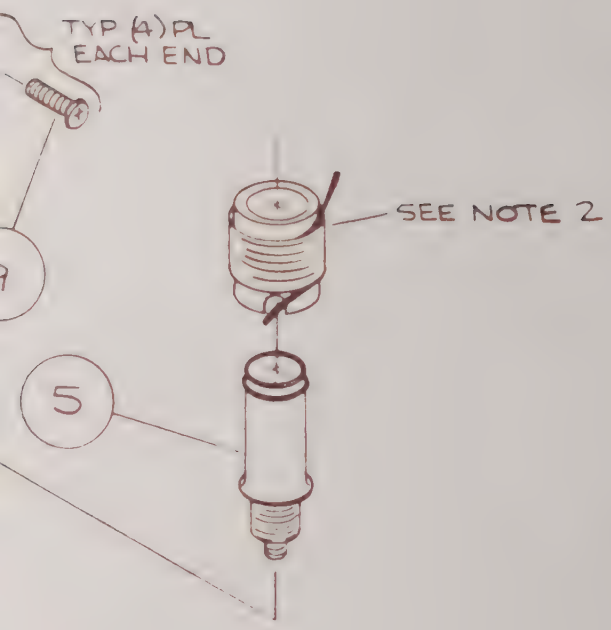

NOTES:

1. WIND 10 TURNS #22 AWG ENAMEL COATED COPPER WIRE AROUND ITEM 6 (COIL FORM). CONNECT ONE END TO GROUND END OF ITEM 5 (CAP) AND CONNECT OPPOSITE END OF COIL TO LEAD AT UPPER END OF CAP. COAT WINDING WITH "Q-DOPE" OR SIMILAR MAT'L. CARE MUST BE TAKEN THAT ALL COILS IN EACH UNIT ARE WOUND IN A UNIFORM DIRECTION.
2. WIND THIS COIL PER NOTE 1 WITH (8) TURNS #22 AWG ENAMEL COATED COPPER WIRE.

ITEM	REQ'D	PART NO.	DESCRIPTION
11	2	DM05-020D	"ARCO"/EQUIV. 2.0 pF CAP
10	18	#2	INT TOOTH LOCKWASHER
9	18	#2-56X1/4	PBHMS
8	2	23-0400	END PLATE
7	1	23-0398	HOUSING BLOCK
6	4	23-0397	COIL FORM
5	4	VC26G	"JFD" EQUIV TRIMMER CAP
4	3	23-0399	RF BAFFLE
3	2	5158-0008-09	"AMERICON"/EQUIV CONN
2	1	23-0401	TOP COVER
1	1	23-0402	FILTER ASS'Y

NEXT ASS'Y	QT'Y	MODEL
23-0227	1	FM/AM-1000

APPLICATION

LIST OF MATERIALS

TOLERANCES
UNLESS OTHERWISE SPECIFIED
ALL DIMENSIONS APPLY AFTER FINISH
DECIMALS: ± .005
ANGLES: ± 1/2°
FRACTIONS: ± 1/64
SURFACE ROUGHNESS 125
REMOVE ALL BURRS

DRAWN JNV DATE 4-11-75
CHECKED MLS DATE 9 11 75
APPROVED MLS DATE 4 11 75

MATERIAL SEE ABOVE
TREATMENT —
FINISH —

INSTRUMENT FLIGHT RESEARCH CORPORATION
WICHITA, KANSAS

TITLE
108 MHz
BANDPASS FILTER ASS'Y
FM/AM-1000

SIZE | PART NUMBER 2-23-0402 | REV B
SCALE 1:1 | WEIGHT — | SHEET 1 OF 1

Figure 6-35

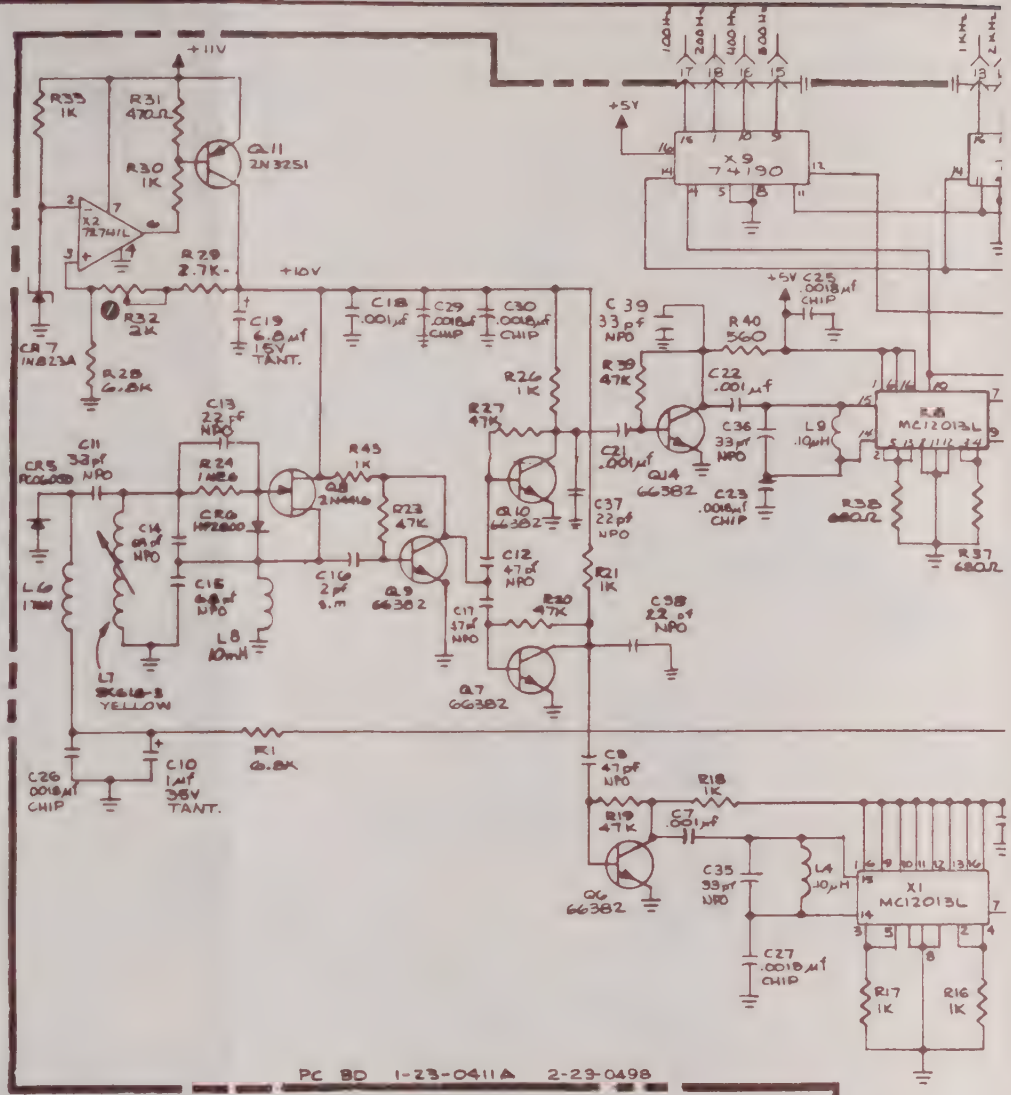

NOTE:

1. ON SOME UNITS NPO CAPS MAY BE SM.
2. WITH POT (R6: 5K) IN CIRCUIT:
   - ADJUST POT (R6) TO REACH 1.70 VDC ± .01V AT ④.
   - RECORD THE VOLTAGE (E) AT ⑤.
   - CALCULATE NEW VALUE FOR R6 PER R6 = $\frac{5 \times 3920}{10 - E}$
   - REPLACE R6 WITH 1% TOLERANCE RES.

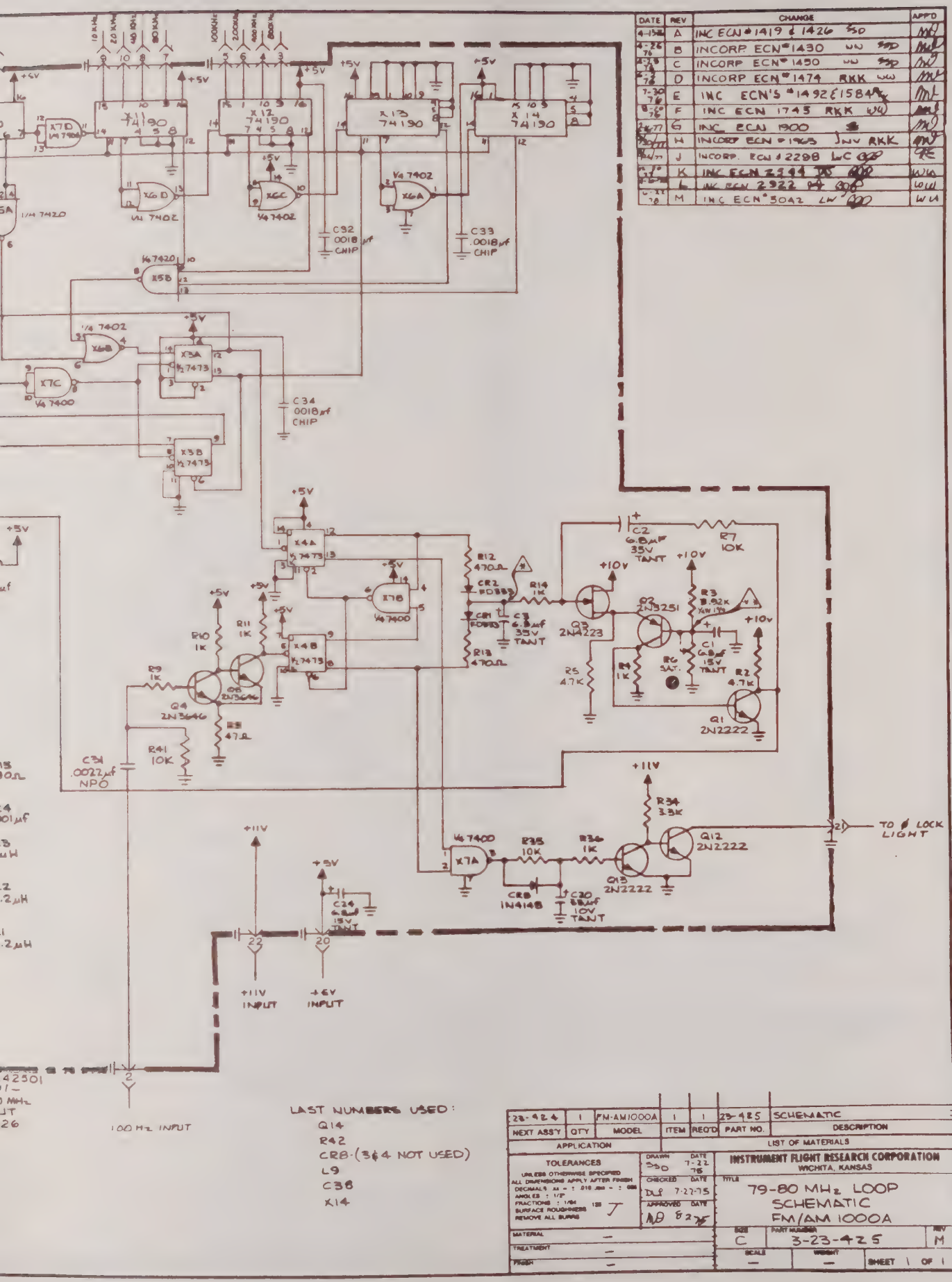
DATE | REV | CHANGE | APP'D
A INC ECN #1419 & 1426
B INCORP ECN #1430
C INCORP ECN #1450
D INCORP ECN #1474 RKK
E INC ECN'S #1492 & 1584
F INC ECN 1745 RKK
G INC ECN 1900
H INCORP ECN #1963 JNV RKK
J INCORP. ECN #2298
K INC ECN 2393
L INC ECN 2922
M INC ECN #3042
X7D 1/4 7420
X12 74190
X13 74190
X14 74190
X6D 1/4 7402
X6C 1/4 7402
X6A 1/4 7402
X5B 1/4 7420
X6B 1/4 7402
X3A 1/2 7473
X7C 1/4 7400
X3B 1/2 7473
C92 .0018 CHIP
C33 .0018 CHIP
C34 .0018 CHIP
X4A 1/2 7473
X7B 1/4 7400
X4B 1/2 7473
R12 470Ω
R13 470Ω
R14 1K
CR2 FD333
CR1 FD333
C3 6.8 35V TANT
C2 6.8 35V TANT
R7 10K
R3 3.92K
R2 4.7K
R1 1K
R5 4.7K
R6 SAT.
C1 6.8 15V TANT
Q3 2N3251
Q3 2N4223
Q1 2N2222
R10 1K
R11 1K
R9 1K
Q5 2N3646
Q4 2N3646
R8 47Ω
R41 10K
C31 .0022 NPO
X7A 1/4 7400
R35 10K
R36 1K
CR3 1N4148
C30 .68 10V TANT
R34 3.3K
Q12 2N2222
Q13 2N2222
C24 4.8 15V TANT
TO ∅ LOCK LIGHT
+11V INPUT
+6V INPUT
100 MHz INPUT
LAST NUMBERS USED:
Q14
R42
CR8 (3 & 4 NOT USED)
L9
C38
X14
23-424 | 1 | FM-AM1000A | 1 | 1 | 23-425 | SCHEMATIC
NEXT ASSY | QTY | MODEL | ITEM | REQ'D | PART NO. | DESCRIPTION
APPLICATION | LIST OF MATERIALS
TOLERANCES
DRAWN SSD 7-22-75
CHECKED DLF 7-22-75
APPROVED MD 8-2-75
INSTRUMENT FLIGHT RESEARCH CORPORATION
WICHITA, KANSAS
TITLE
79-80 MHz LOOP
SCHEMATIC
FM/AM 1000A
SIZE C
PART NUMBER 3-23-425
REV M
MATERIAL —
TREATMENT —
FINISH —
SCALE —
WEIGHT —
SHEET 1 OF 1

Figure 6-36

NOTES:

1. ALL RESISTORS ARE 1/4 W., 10% TOLERANCE EXCEPT AS NOTED
2. ALL CAPACITOR VALUES ARE IN μF EXCEPT AS NOTED.
3. COMPONENT LEADS MAY EXTEND .04 TO .06 BEYOND BOTTOM OF BOARD AFTER SOLDERING.
4. MAXIMUM HEIGHT OF COMPONENTS TO BE .48 FROM COMPONENT SIDE OF BOARD.
5. PLACE CHIP CAPACITORS ON BACK SIDE OF BOARD, UNLESS SHOWN ON FRONT
6. * NOTES NPO CAP
7. BROKEN LINES NOTE COMPONENTS OR JUMPERS ON BACK OF BOARD
8. SCHEMATIC No. 3-23-425
9. PARTS LIST No. 1-23-424
10. PC No. 2-23-498
11. ALL CHIP CAPS ARE .0018 μf
12. NPO NECESSARY BECAUSE OF ENCLOSURE SPACE LIMITATIONS ONLY
13. BEND LEAD OF RES ON BACK OF BD & SOLDER TO POSITION SHOWN
14. REFERENCE PROCEDURE No 1-34-031 PART B, PARAGRAPH II.

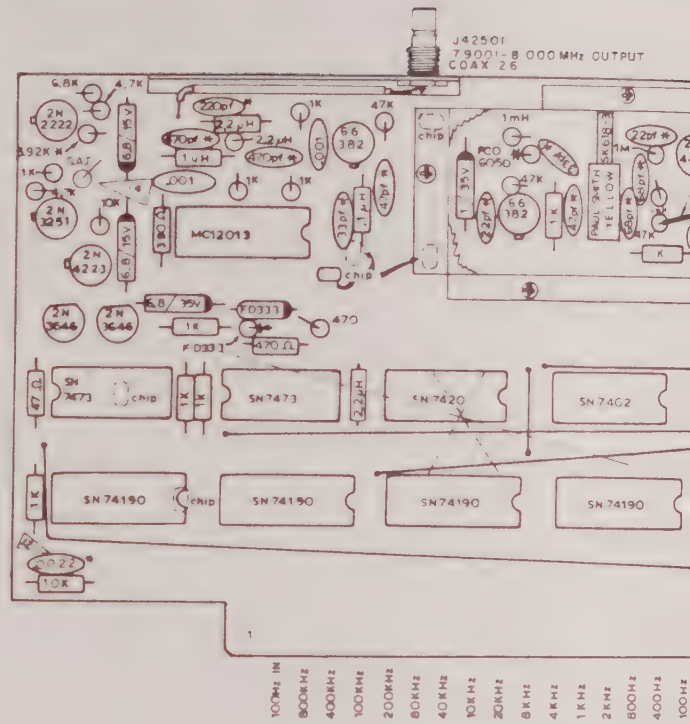

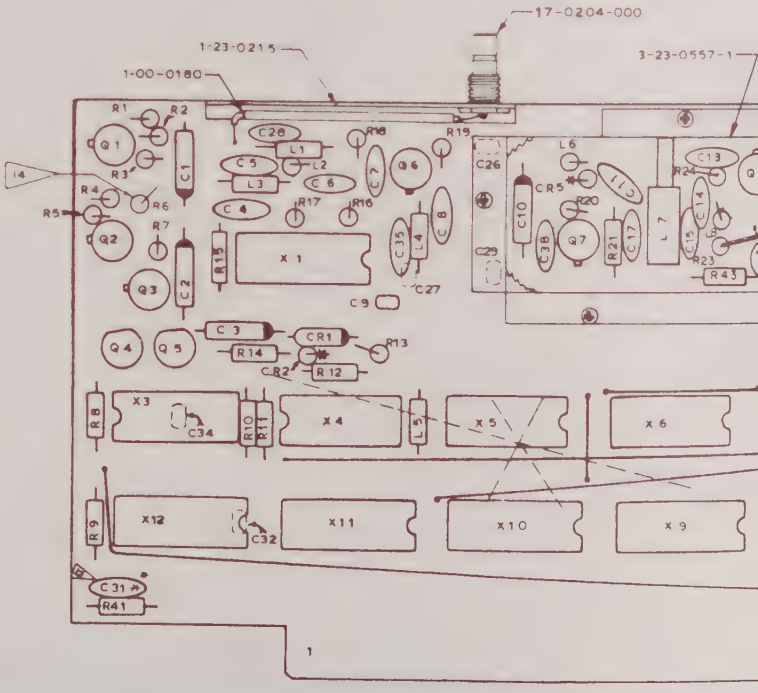

L INC ECN 2944
M INC ECN 2922
N INC ECN 3042 LW

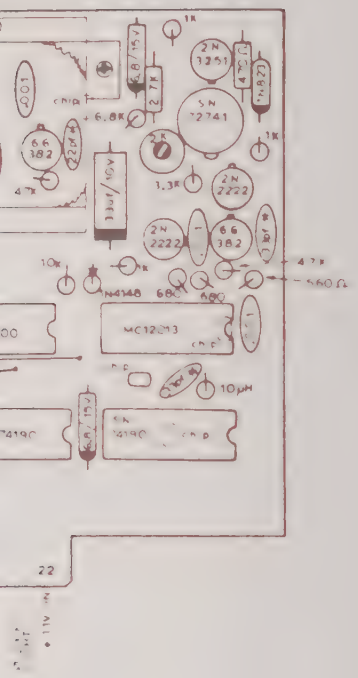

2x1/8 SELF TAPPING SCW. 6 PLACES

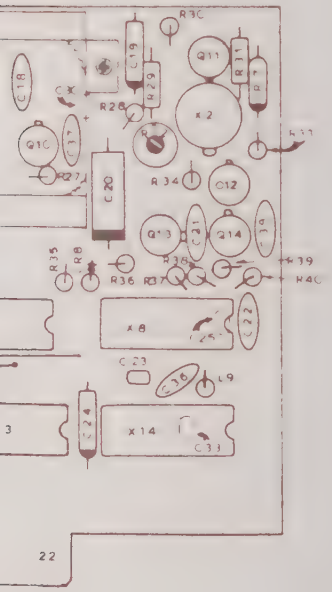

3-23- ASS'Y Dwg

79 80 MHz LOOP ASS'Y. DRAWING

D 4-23- 424

2 x 1

Figure 6-3

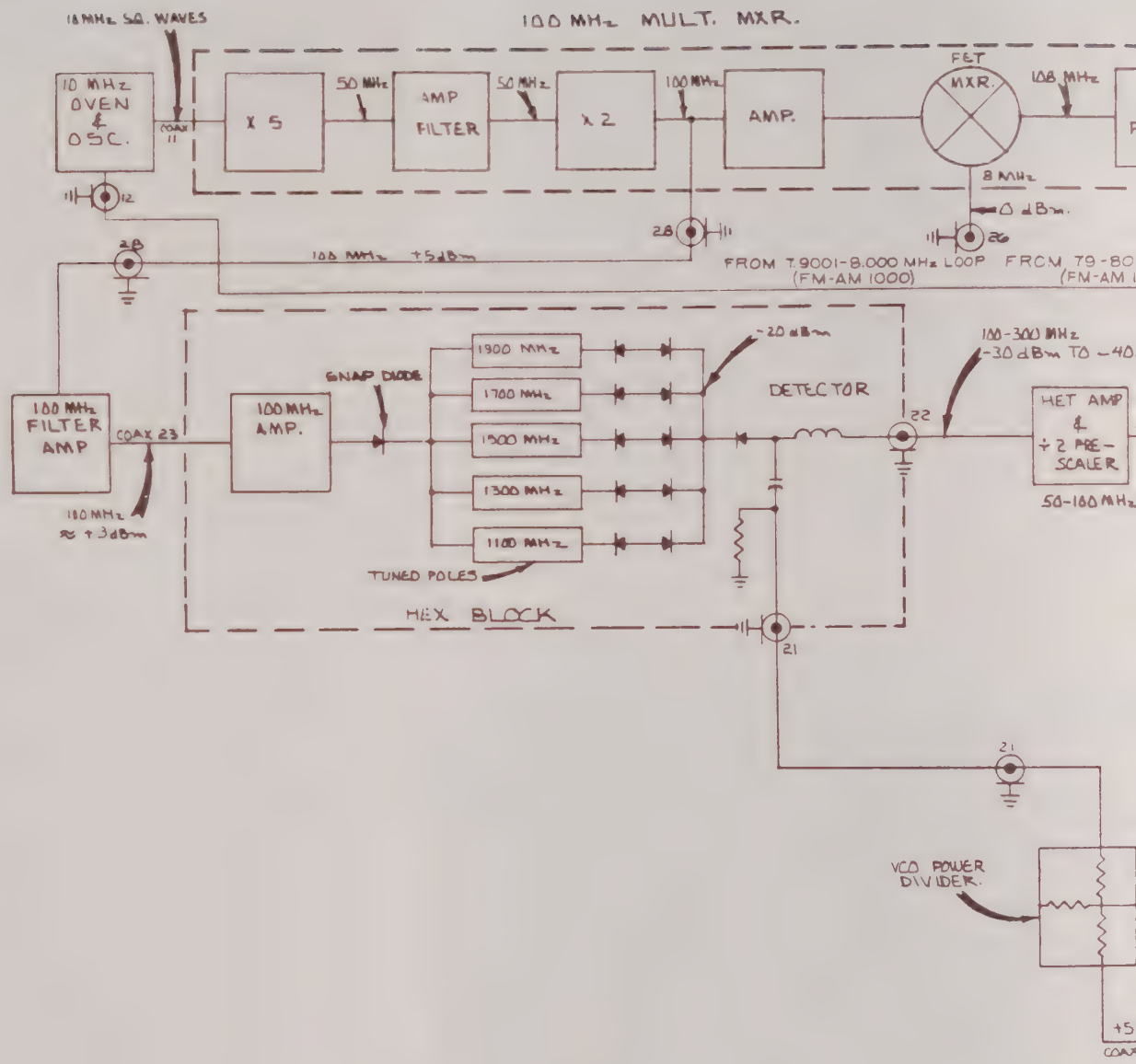
18 MHz SQ. WAVES
100 MHz MULT. MXR.
10 MHz OVEN & OSC.
COAX 11
X 5
50 MHz
AMP FILTER
50 MHz
X 2
100 MHz
AMP.
FET MXR.
108 MHz
8 MHz
0 dBm.
12
28
26
100 MHz +5dBm
FROM 7.9001-8.000 MHz LOOP (FM-AM 1000)
FROM 79-80
(FM-AM
100 MHz FILTER AMP
COAX 23
100 MHz ≈ +3dBm
100 MHz AMP.
SNAP DIODE
1900 MHz
1700 MHz
1500 MHz
1300 MHz
1100 MHz
TUNED POLES
-20 dBm
DETECTOR
22
100-300 MHz -30 dBm TO -40
HET AMP & ÷2 PRE-SCALER
50-150 MHz
HEX BLOCK
21
21
VCO POWER DIVIDER.
+5
COAX

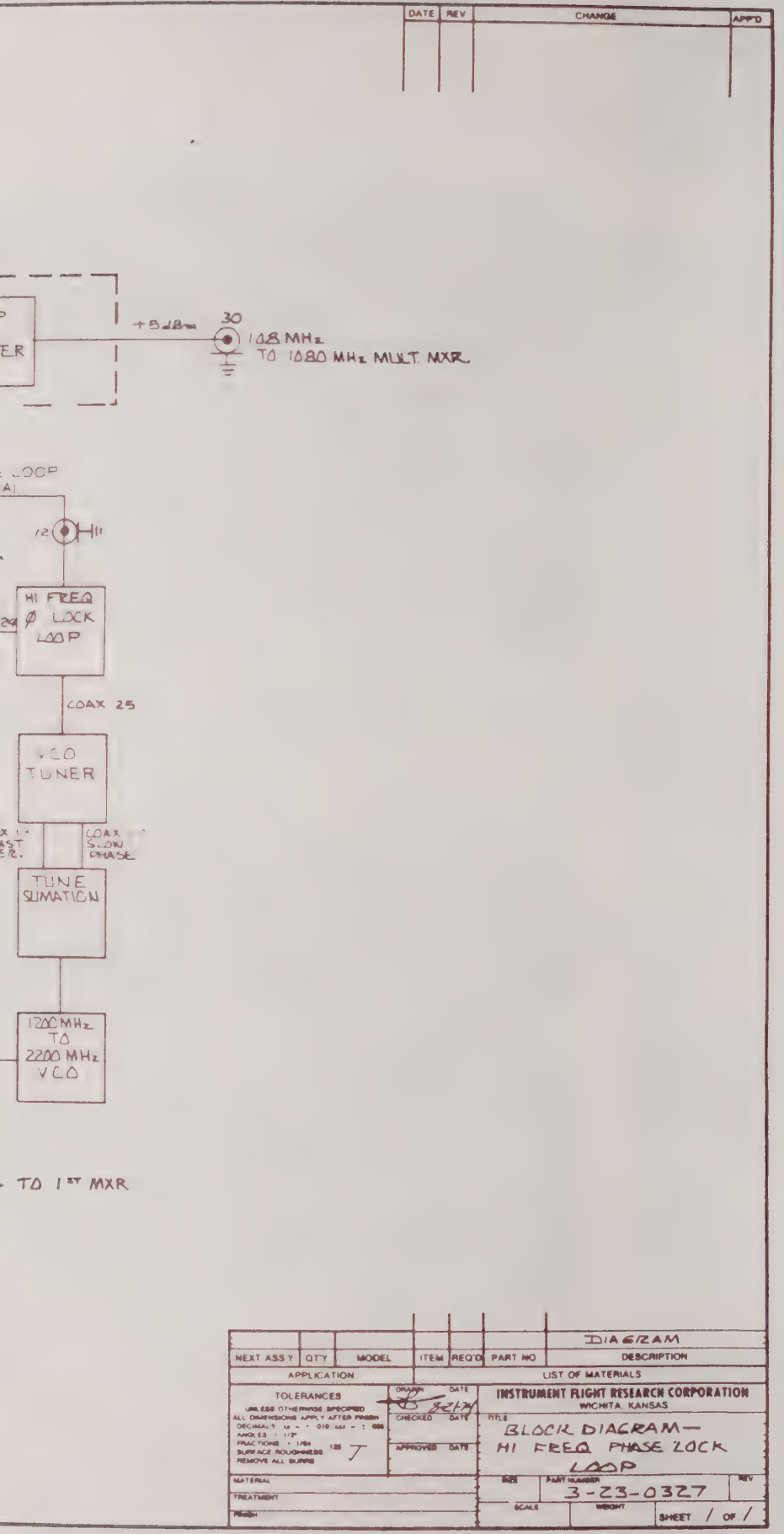
DATE
REV
CHANGE
APP'D
+5 dBm
30
108 MHz
TO 1080 MHz MULT. MXR.
LOOP
12
11
HI FREQ
Ø LOCK
LOOP
COAX 25
VCO
TUNER
COAX
SLOW
PHASE
TUNE
SUMATION
1200 MHz
TO
2200 MHz
VCO
TO 1ST MXR
DIAGRAM
NEXT ASSY
QTY
MODEL
ITEM
REQ'D
PART NO
DESCRIPTION
APPLICATION
LIST OF MATERIALS
TOLERANCES
UNLESS OTHERWISE SPECIFIED
ALL DIMENSIONS APPLY AFTER FINISH
DECIMALS
ANGLES
FRACTIONS
SURFACE ROUGHNESS
REMOVE ALL BURRS
DRAWN
DATE
CHECKED
DATE
APPROVED
DATE
INSTRUMENT FLIGHT RESEARCH CORPORATION
WICHITA, KANSAS
TITLE
BLOCK DIAGRAM—
HI FREQ PHASE LOCK
LOOP
MATERIAL
TREATMENT
FINISH
SIZE
PART NUMBER
3-23-0327
REV
SCALE
WEIGHT
SHEET / OF /

Figure 6-38

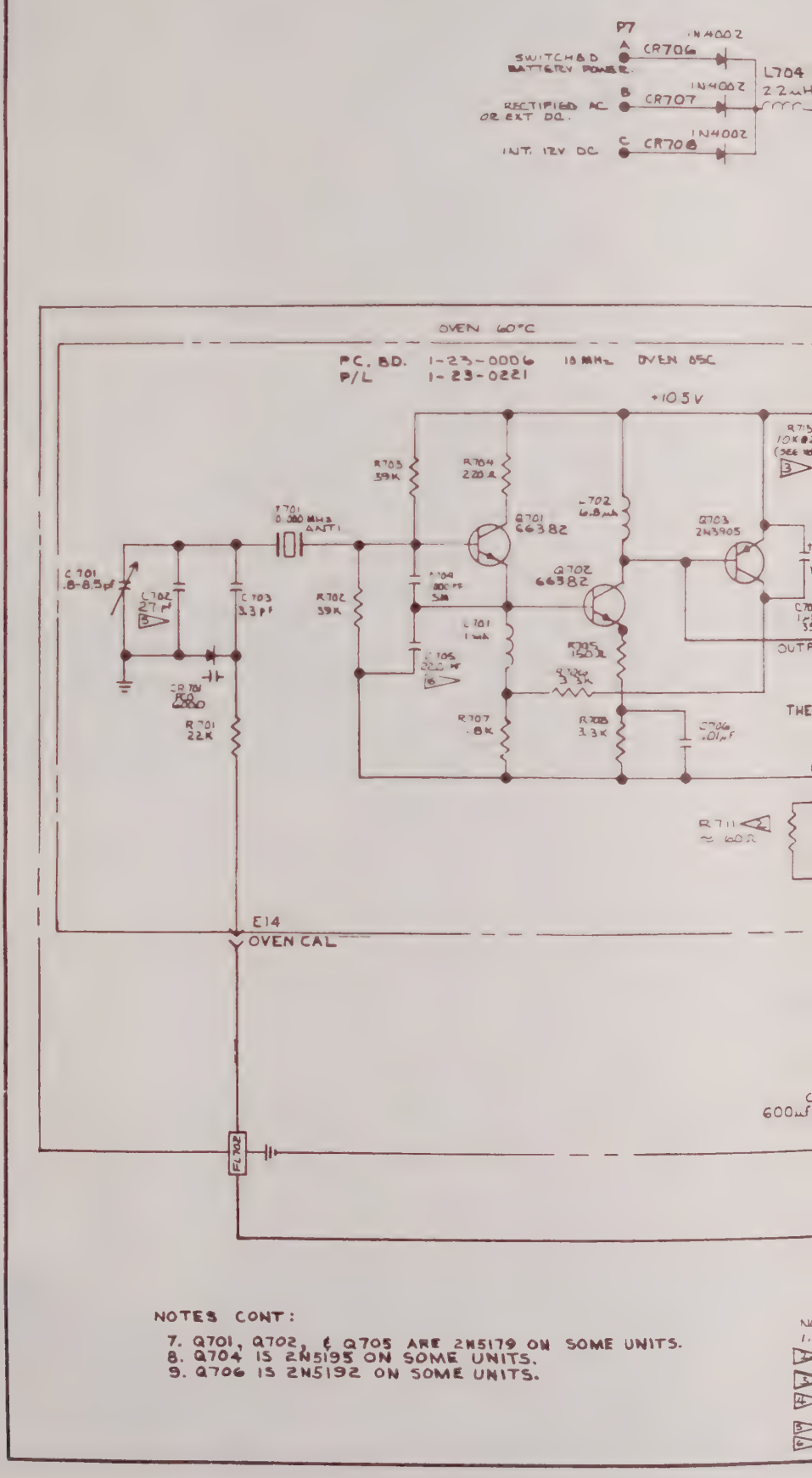

NOTES CONT:

7. Q701, Q702, & Q705 ARE 2N5179 ON SOME UNITS.
8. Q704 IS 2N5195 ON SOME UNITS.
9. Q706 IS 2N5192 ON SOME UNITS.

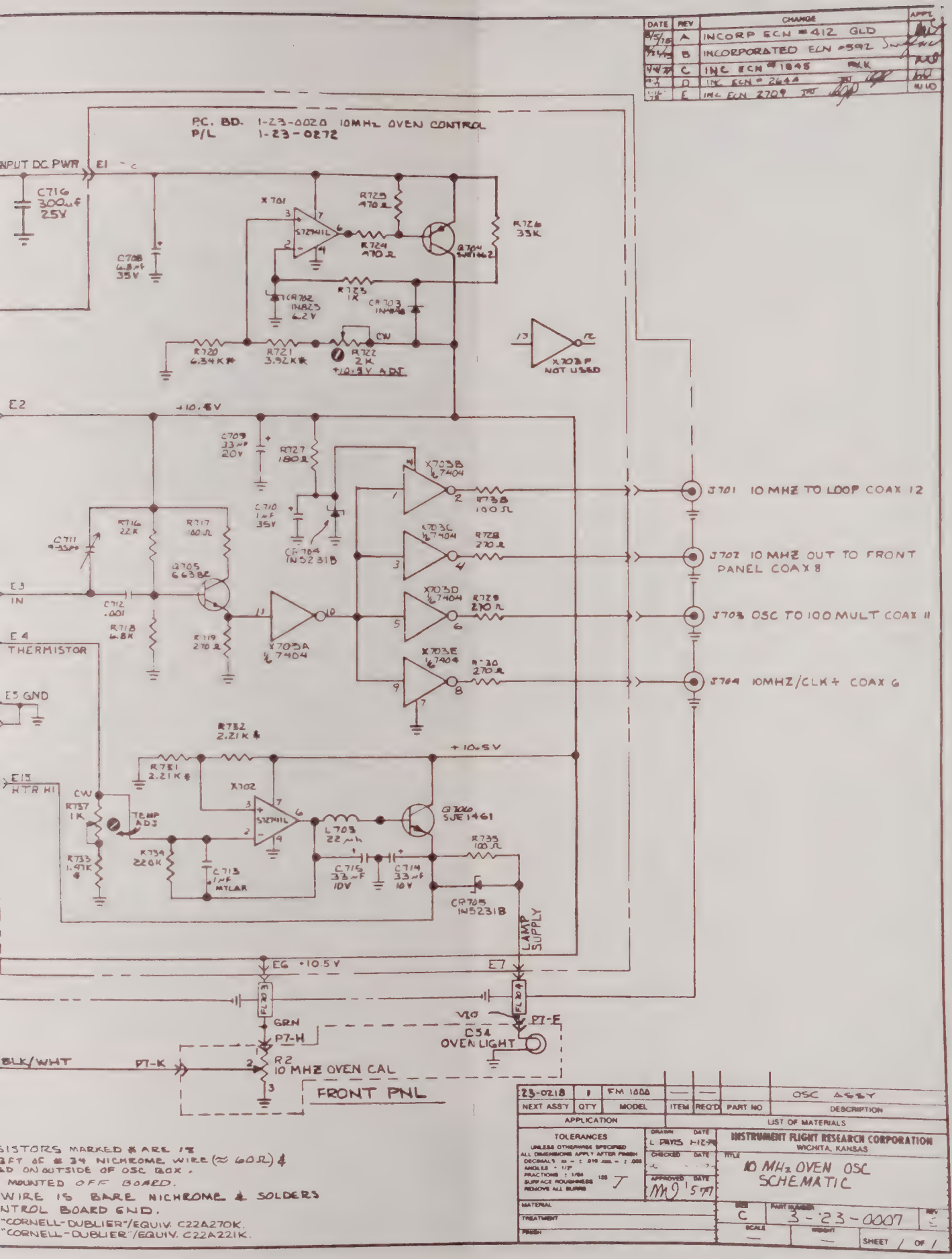

DATE REV CHANGE APPL
A INCORP ECN #412 GLD
B INCORPORATED ECN #592
C INC ECN #1845
D INC ECN #2644
E INC ECN 2709
P.C. BD. 1-23-0020 10MHz OVEN CONTROL
P/L 1-23-0272
INPUT DC PWR
E1
C716 300uf 25V
C708 6.8uf 35V
X701
S72741L
R725 470Ω
R724 470Ω
R726 33K
Q704 SJE1462
R723 1K
CR702 1N823 6.2V
CR703 1N4148
R720 6.34K
R721 3.92K
R722 2K
+10.5V ADJ
CW
X703F NOT USED
E2
+10.5V
C709 33uf 20V
R727 180Ω
C710 1uf 35V
CR704 1N5231B
X703B 1/6 7404
R738 100Ω
X703C 1/6 7404
R728 270Ω
X703D 1/6 7404
R729 270Ω
X703E 1/6 7404
R730 270Ω
J701 10 MHZ TO LOOP COAX 12
J702 10 MHZ OUT TO FRONT PANEL COAX 8
J703 OSC TO 100 MULT COAX 11
J704 10MHZ/CLK+ COAX 6
C711 9-35pf
R716 22K
R717 100Ω
Q705 6638Z
E3 IN
C712 .001
R718 6.8K
R719 270Ω
X703A 1/6 7404
E4 THERMISTOR
E5 GND
R732 2.21K
R731 2.21K
+10.5V
E15 HTR HI
CW
R737 1K
TEMP ADJ
R733 1.47K
R734 220K
C713 .1uf MYLAR
X702
S72741L
L703 22uh
Q706 SJE1461
R735 100Ω
C715 33uf 10V
C714 33uf 10V
CR705 1N5231B
LAMP SUPPLY
E6 +10.5V
E7
FL203
FL204
GRN
P7-H
V10
P7-E
C54 OVEN LIGHT
BLK/WHT
P7-K
R2 10 MHZ OVEN CAL
FRONT PNL
SISTORS MARKED * ARE 18
3FT OF #34 NICHROME WIRE (≈ 60Ω) &
ED ON OUTSIDE OF OSC BOX.
MOUNTED OFF BOARD.
WIRE IS BARE NICHROME & SOLDERS
NTROL BOARD GND.
"CORNELL-DUBLIER"/EQUIV. C22A270K.
"CORNELL-DUBLIER"/EQUIV. C22A221K.
23-0218 1 FM 1000 OSC ASSY
NEXT ASS'Y QTY MODEL ITEM REQ'D PART NO DESCRIPTION
APPLICATION LIST OF MATERIALS
TOLERANCES
UNLESS OTHERWISE SPECIFIED
ALL DIMENSIONS APPLY AFTER FINISH
DECIMALS ± .010 .XXX ± .005
ANGLES ± 1/2°
FRACTIONS ± 1/64
SURFACE ROUGHNESS 125
REMOVE ALL BURRS
DRAWN L DAVIS DATE 1-12-79
CHECKED DATE
APPROVED MJ DATE 5-77
INSTRUMENT FLIGHT RESEARCH CORPORATION
WICHITA, KANSAS
TITLE 10 MHz OVEN OSC SCHEMATIC
MATERIAL
TREATMENT
FINISH
SIZE C
PART NUMBER 3-23-0007
REV
SCALE
WEIGHT
SHEET 1 OF 1

Figure 6-39

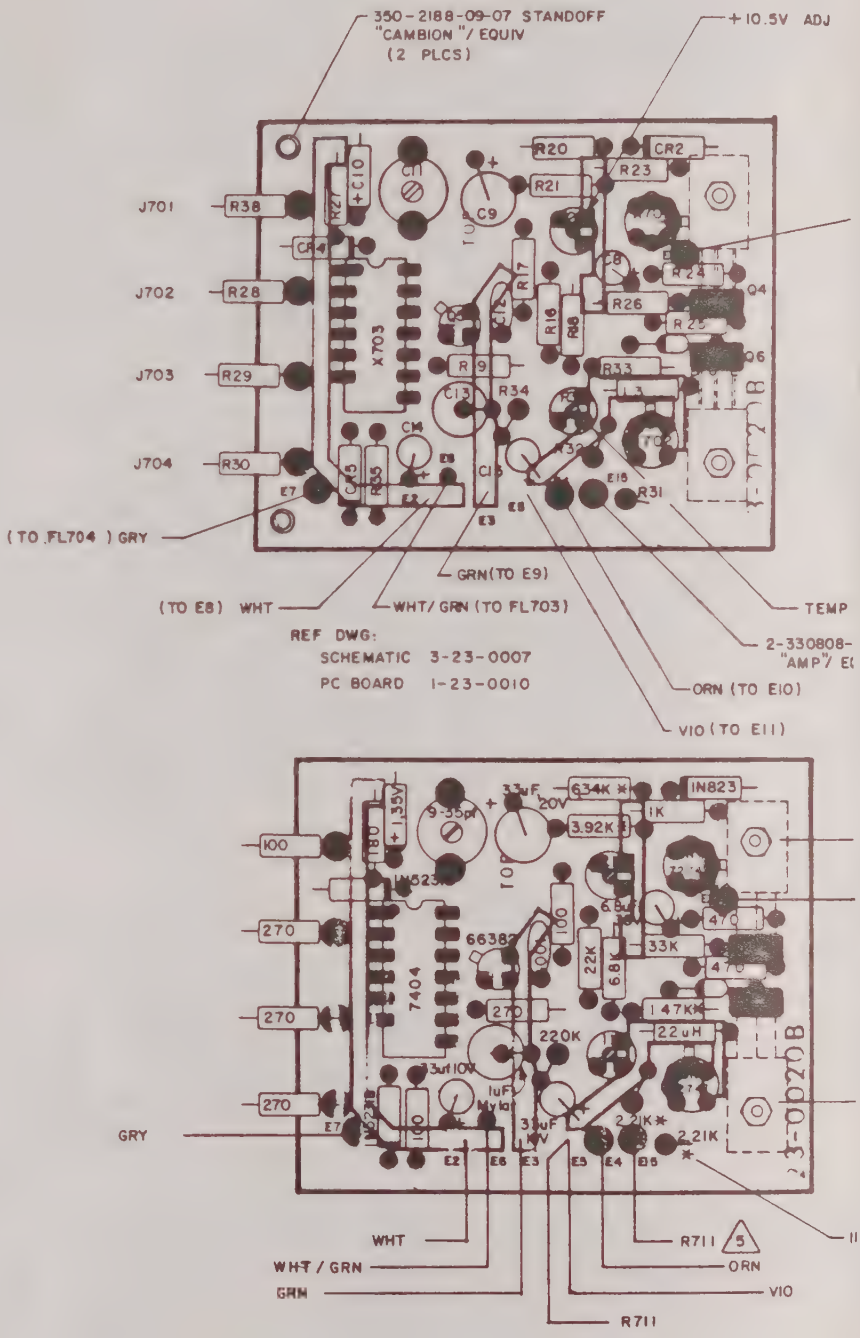
350-2188-09-07 STANDOFF
"CAMBION"/ EQUIV
(2 PLCS)
+10.5V ADJ
J701
J702
J703
J704
R38
R28
R29
R30
CR4
CR2
R20
R21
R23
R24
R26
R25
R33
R34
R31
C10
C9
C12
C13
C14
C15
R17
R16
R18
R27
R35
X703
Q4
Q6
E7
E8
E9
E10
E11
E18
(TO FL704) GRY
(TO E8) WHT
WHT/GRN (TO FL703)
GRN(TO E9)
TEMP
2-330808-
"AMP"/ E
ORN (TO E10)
VIO (TO E11)
REF DWG:
SCHEMATIC 3-23-0007
PC BOARD 1-23-0010
100
270
270
270
GRY
1N823
634K *
3.92K *
1K
33uF
20V
9-35pf
+1.35V
7404
66383
33K
1.47K*
22uH
220K
2.21K*
2.21K
33uF
10V
1uF
Mylar
WHT
WHT/GRN
GRN
R711
ORN
VIO
R711
5
3-0226B

DATE	REV	CHANGE	APP'D
9/22/74	A	INC ECN 1 LD	
12/22/74	B	2 LD	
8/6/75	C	410 JNV	
11/20/75	D	1131 SSD	
4/13/77	E	1845 RKK	
4/18/77	F	2020 TJT	
6/21/77	G	2078 TJT	
12/20/77	H	2644 INITIAL RELEASE	

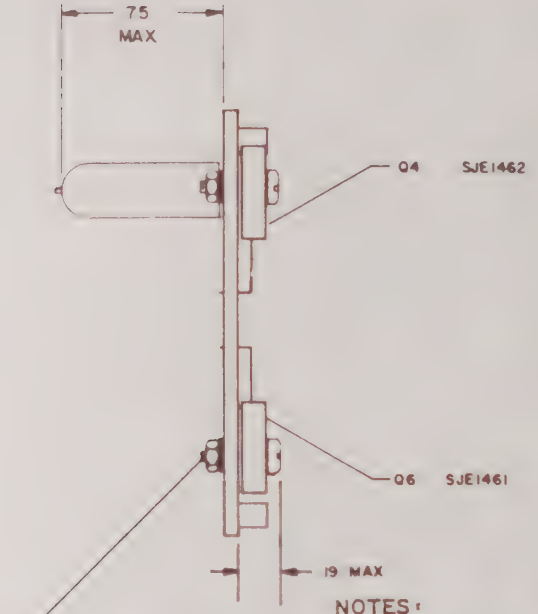

RED (TO FL701)

RING SOCKET

462

RED

461

ATES 1% RESISTOR

4-40 x 7/16 PBHMS, NYLON
NO 4 LOCKWASHER
NO 4 NUT, HEX
(2 PLCS)

SEE NEXT ASSY 3-23-0218

NOTES:

1. ALL RESISTORS ARE 1/4 W., 10% TOLERANCE EXCEPT AS NOTED.
2. ALL CAPACITOR VALUES ARE IN μF EXCEPT AS NOTED.
3. COMPONENT LEADS MAY EXTEND .04 TO .06 BEYOND BOTTOM OF BOARD AFTER SOLDERING.
4. MAXIMUM HEIGHT OF COMPONENTS TO BE .75 FROM COMPONENT SIDE OF BOARD.
5. R711 IS 3'0 (FT) OF NO 34 NICHROME WIRE, AND IS APPROX 60Ω.
6. ALL JUMPERS ARE 26 AWG TEFLON WIRE

ITEM	REQ'D	PART NO	DESCRIPTION
1	1	1-23-0272	ASSY P/L

LIST OF MATERIALS

NEXT ASSY	23-0218
QTY	1
MODEL	PX-ASY-1000
APPLICATION	

TOLERANCES
UNLESS OTHERWISE SPECIFIED
ALL DIMENSIONS APPLY AFTER FINISH
DECIMALS .XX ± .010 .XXX ± .005
ANGLES ± 1/2°
FRACTIONS ± 1/64
SURFACE ROUGHNESS 125
REMOVE ALL BURRS

DRAWN DATE 4/22/77
CHECKED DATE
APPROVED DATE

MATERIAL
FINISH

-IFR INC-
WICHITA, KANSAS

TITLE
10MHz OVEN CONTROL
PC BOARD ASSY
FM/AM-1000

SIZE C | PART NUMBER 3-23-0272 | REV H
SCALE 2/1 | WEIGHT | SHEET OF 1

Figure 6-40

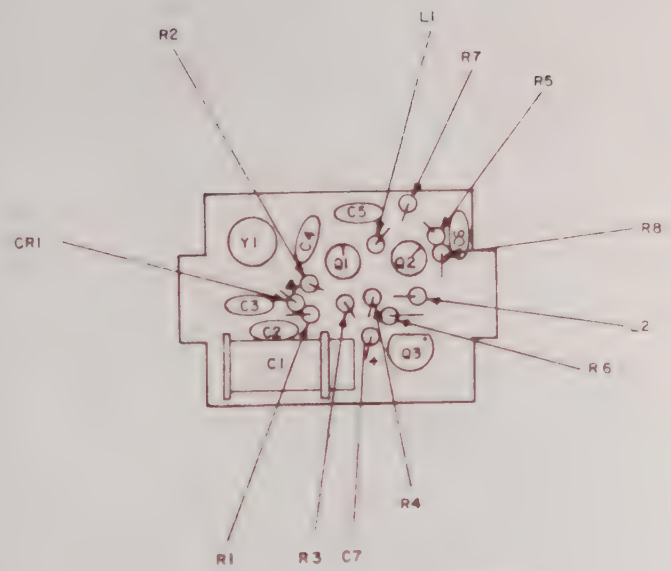
R2
L1
R7
R5
CR1
Y1
C4
C5
Q1
Q2
R8
C3
C2
C1
Q3
R6
R4
R1
R3
C7

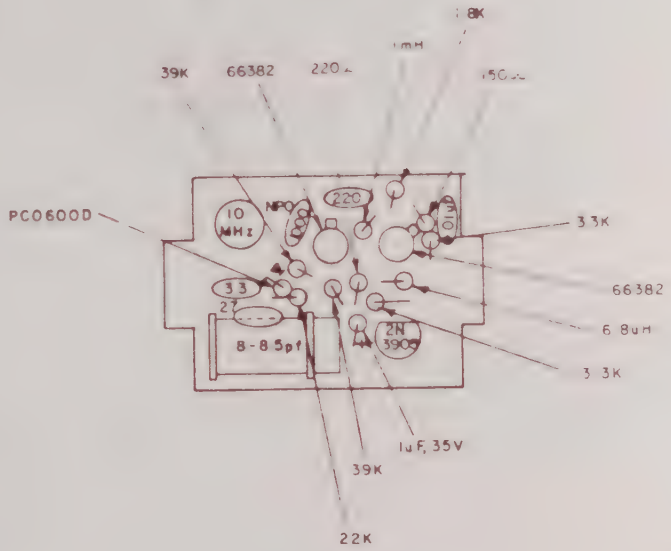
39K
66382
220
PC0600D
10 MHz
NPO
220
33K
66382
6.8uH
33
27
8-8.5pf
2N 3905
3.3K
1uF, 35V
39K
22K

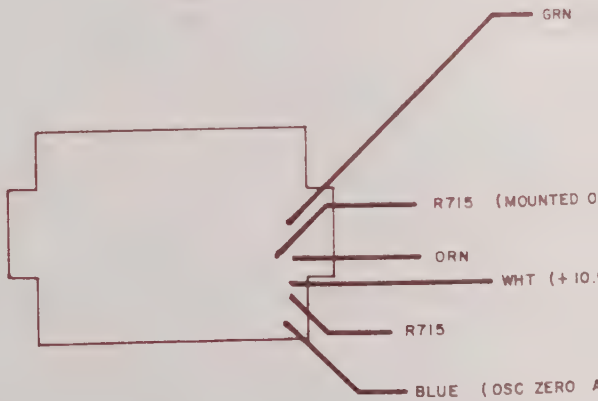
GRN
R715 (MOUNTED O
ORN
WHT (+10.
R715
BLUE (OSC ZERO A

DATE	REV	CHANGE

NOTES:

1. ALL RESISTORS ARE 1/4 W., 10% TOLERANCE EXCEPT AS NOTED.
2. ALL CAPACITOR VALUES ARE IN pF EXCEPT AS NOTED.
3. COMPONENT LEADS MAY EXTEND .04 TO 06 BEYOND BOTTOM OF BOARD AFTER SOLDERING.
4. MAXIMUM HEIGHT OF COMPONENTS TO BE .40 FROM COMPONENT SIDE OF BOARD.
5. REFERENCE DWG
   PC BOARD 1-23-0006
   SCHEMATIC 3-23-0007

ITEM	REQ'D	PART NO	DESCRIPTION
1	1	1-23-0221	ASSY

LIST OF MATERIALS

NEXT ASSY: 1	QTY: 1	MODEL	APPLICATION

TOLERANCES
UNLESS OTHERWISE SPECIFIED
ALL DIMENSIONS APPLY AFTER FINISH
DECIMALS .xx = ± .010 .xxx = ± .005
ANGLES ± 1/2°
FRACTIONS ± 1/64
SURFACE ROUGHNESS 125
REMOVE ALL BURRS

DRAWN DATE
CHECKED DATE
APPROVED DATE

MATERIAL
FINISH

- IFR INC -
WICHITA KANSAS

TITLE
10 MHz OVEN OSCILLATOR
PC BOARD ASSY
FM / AM 1000

SIZE C | PART NUMBER 3-23-0221 | REV
SCALE | WEIGHT | SHEET OF

Figure 6-41

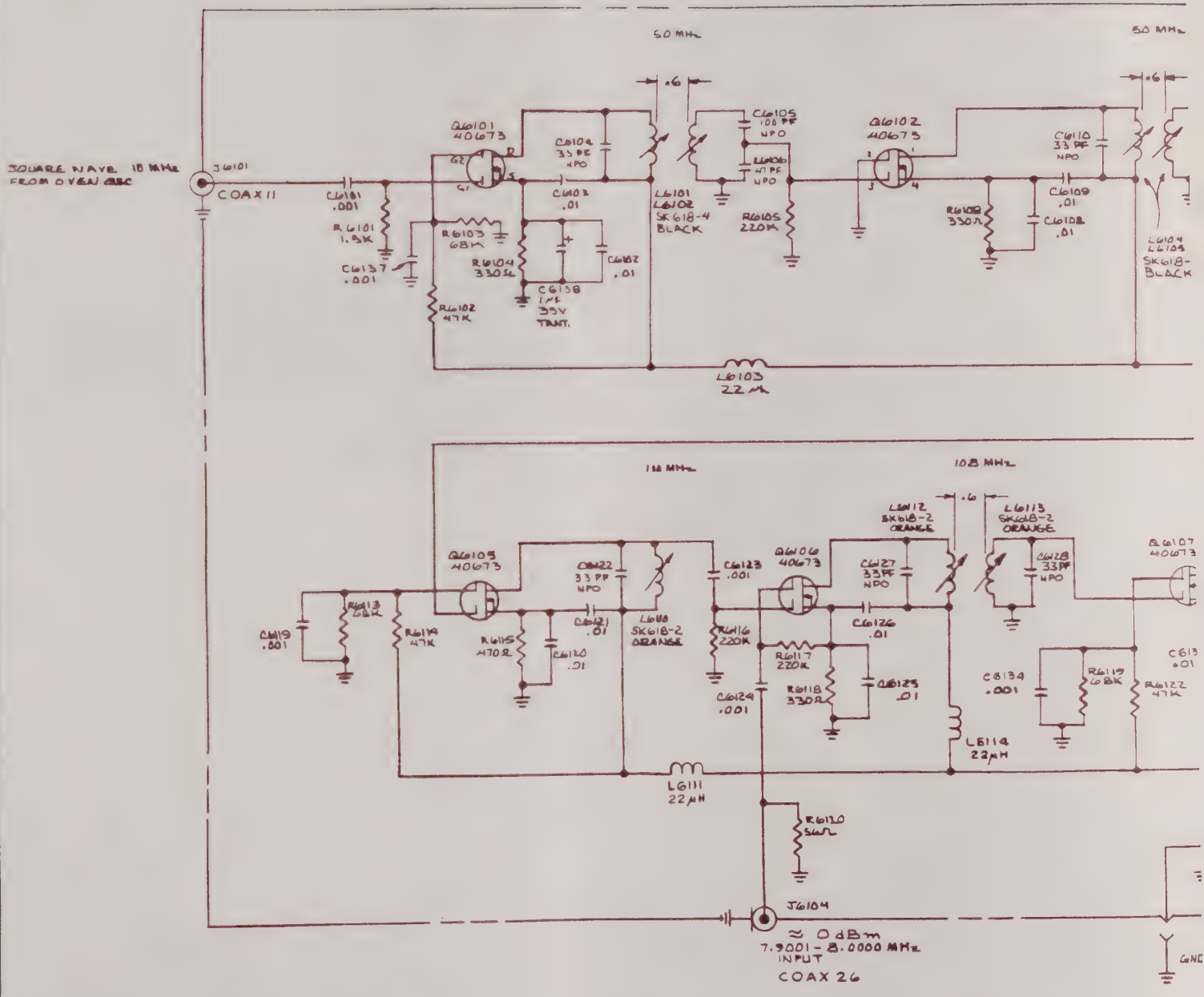

NOTE:

1. LAST USED NUMBERS:
   R 6125
   C 6138
   L 6118

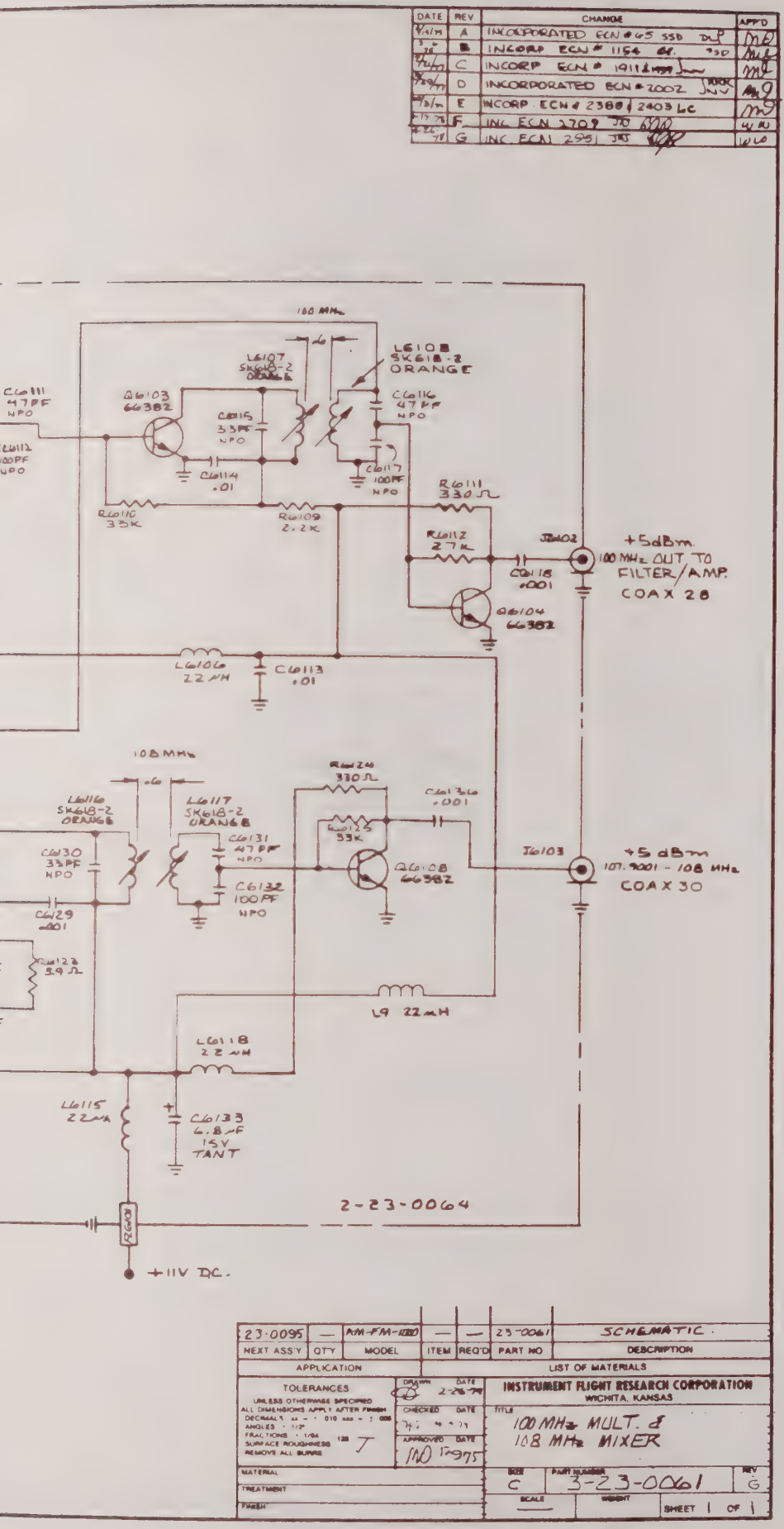
DATE
REV
CHANGE
APP'D
A
INCORPORATED ECN #65 SSD
B
INCORP ECN # 1154
C
INCORP ECN # 1911
D
INCORPORATED ECN # 2002
E
INCORP ECN # 2388 & 2403 LC
F
INC ECN 2709
G
INC ECN 2991
180 MHz
L6107 SK618-2 ORANGE
L6108 SK618-2 ORANGE
Q6103 6638Z
C6115 33PF NPO
C6116 47PF NPO
C6114 .01
C6117 100PF NPO
C6111 47PF NPO
C6112 100PF NPO
R6110 33K
R6109 2.2K
R6111 330Ω
R6112 27Ω
C6118 .001
J6102
+5dBm 100 MHz OUT TO FILTER/AMP. COAX 28
Q6104 6638Z
L6106 22 μH
C6113 .01
108 MHz
L6116 SK618-2 ORANGE
L6117 SK618-2 ORANGE
R6124 330Ω
C6136 .001
R6125 33K
C6130 33PF NPO
C6131 47PF NPO
C6132 100PF NPO
J6103
+5 dBm 107.9001 - 108 MHz COAX 30
Q6108 6638Z
C6129 .001
R6123 3.9Ω
L9 22 μH
L6118 22 μH
L6115 22 μH
C6133 6.8 μF 15V TANT
2-23-0064
+11V DC.
23-0095
—
AM-FM-1000
—
—
23-0061
SCHEMATIC
NEXT ASS'Y
QTY
MODEL
ITEM
REQ'D
PART NO
DESCRIPTION
APPLICATION
LIST OF MATERIALS
TOLERANCES
UNLESS OTHERWISE SPECIFIED
ALL DIMENSIONS APPLY AFTER FINISH
DECIMALS .xx ± .010 .xxx ± .005
ANGLES ± 1/2°
FRACTIONS ± 1/64
SURFACE ROUGHNESS 125
REMOVE ALL BURRS
DRAWN
DATE 2-26-79
CHECKED
DATE
APPROVED
DATE 10-9-79
INSTRUMENT FLIGHT RESEARCH CORPORATION
WICHITA, KANSAS
TITLE
100 MHz MULT. & 108 MHz MIXER
MATERIAL
TREATMENT
FINISH
SIZE C
PART NUMBER 3-23-0061
REV G
SCALE
WEIGHT
SHEET 1 OF 1

Figure 6-42

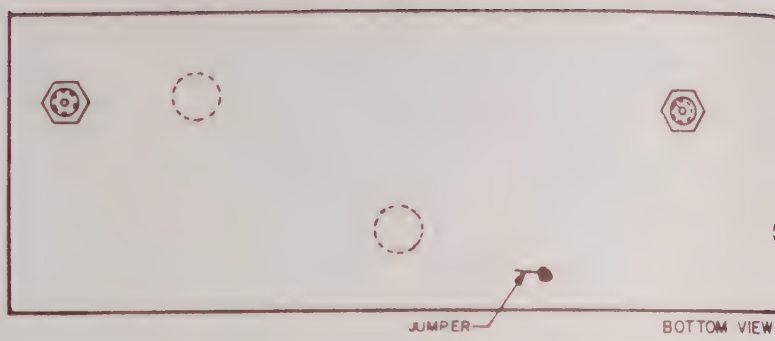

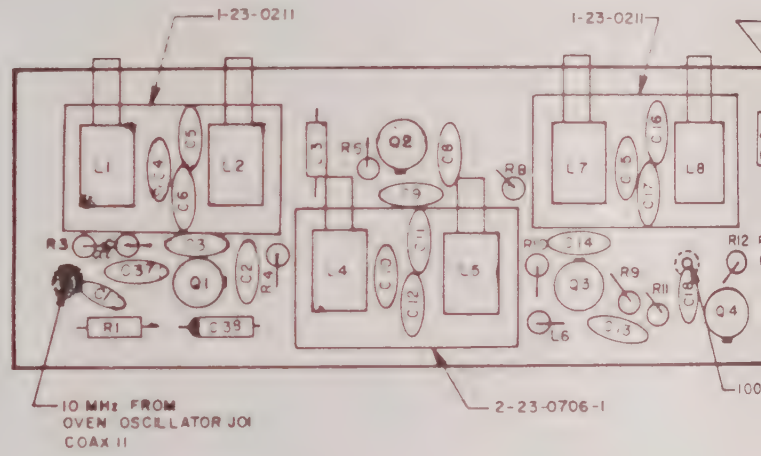

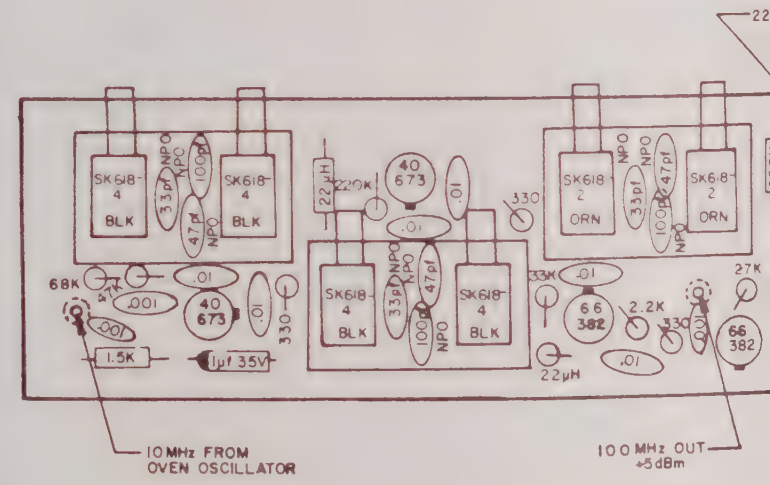

NOTE :

1. ALL RESISTORS ARE 1/4 W, 10% TOL. EXCEPT AS NOTED.
2. ALL CAPACITORS ARE IN µf EXCEPT AS NOTED.
3. COMPONENT LEADS MAY EXTEND .04 TO .06 BEYOND BOTTOM OF BOARD AFTER SOLDERING.
4. MAXIM HEIGHT OF COMPONENTS TO BE .45 FROM COMPONENT SIDE OF BOARD.
5. ALL COMPONENT CALL OUTS ARE PREFIXED WITH 61 i.e. C6102, R6102

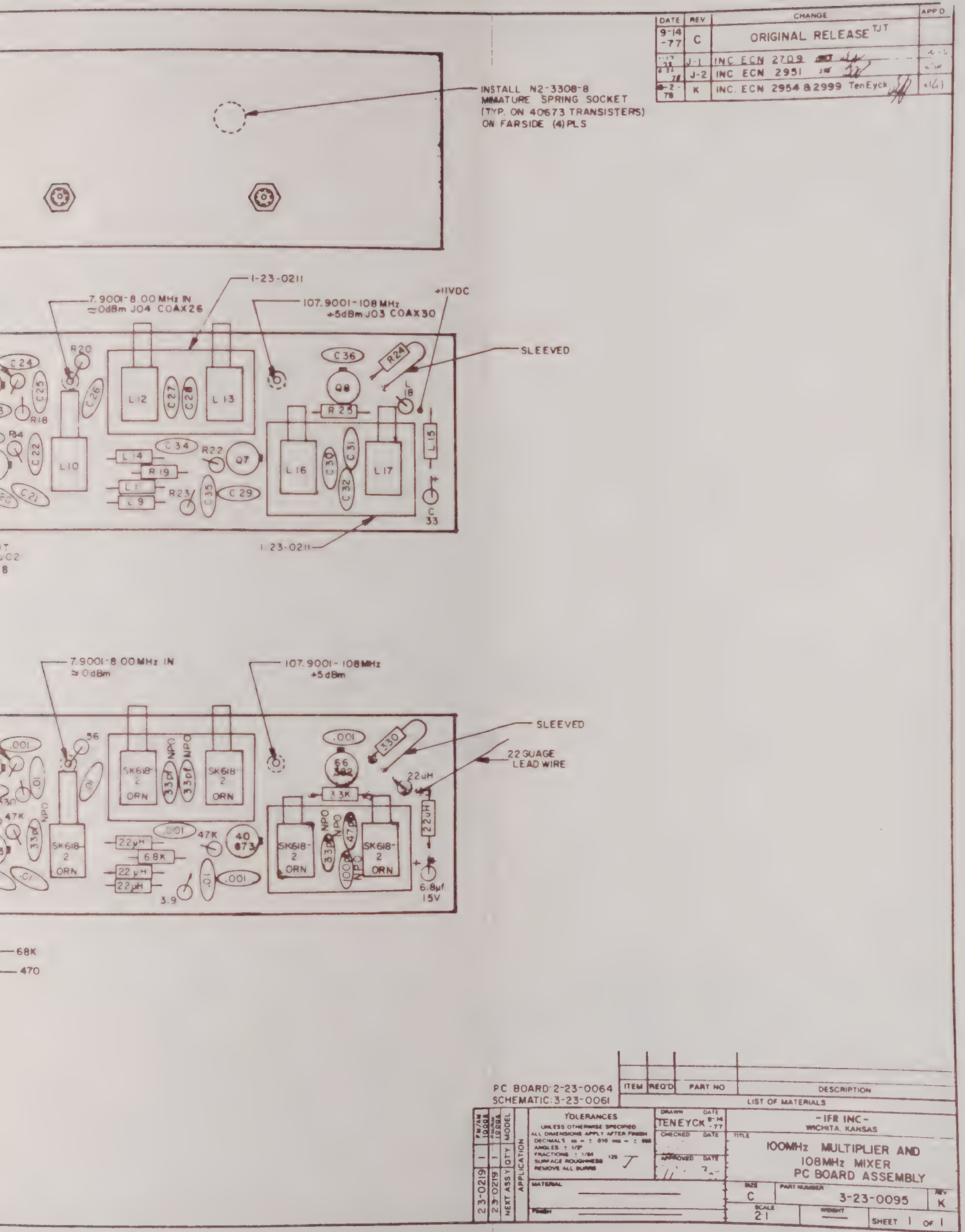
DATE
REV
CHANGE
APP'D
9-14-77
C
ORIGINAL RELEASE TJT
J-1
INC ECN 2709
J-2
INC ECN 2951
K
INC. ECN 2954 & 2999 TenEyck
INSTALL N2-3308-8 MINIATURE SPRING SOCKET (TYP. ON 40673 TRANSISTERS) ON FARSIDE (4) PLS
1-23-0211
7.9001-8.00 MHz IN ≈0dBm J04 COAX26
107.9001-108 MHz +5dBm J03 COAX30
+11VDC
SLEEVED
1-23-0211
7.9001-8.00 MHz IN ≈0dBm
107.9001-108 MHz +5dBm
SLEEVED
22 GUAGE LEAD WIRE
68K
470
PC BOARD: 2-23-0064
SCHEMATIC: 3-23-0061
ITEM
REQ'D
PART NO
DESCRIPTION
LIST OF MATERIALS
TOLERANCES
UNLESS OTHERWISE SPECIFIED
ALL DIMENSIONS APPLY AFTER FINISH
DECIMALS
ANGLES ± 1/2°
FRACTIONS ± 1/64
SURFACE ROUGHNESS
REMOVE ALL BURRS
DRAWN TENEYCK 9-14-77
CHECKED
APPROVED
MATERIAL
FINISH
-IFR INC-
WICHITA, KANSAS
TITLE
100MHz MULTIPLIER AND 108MHz MIXER PC BOARD ASSEMBLY
SIZE C
PART NUMBER 3-23-0095
REV K
SCALE 2:1
WEIGHT
SHEET 1 OF 1
23-0219
23-0219
NEXT ASSY
QTY
MODEL
APPLICATION

Figure 6-43

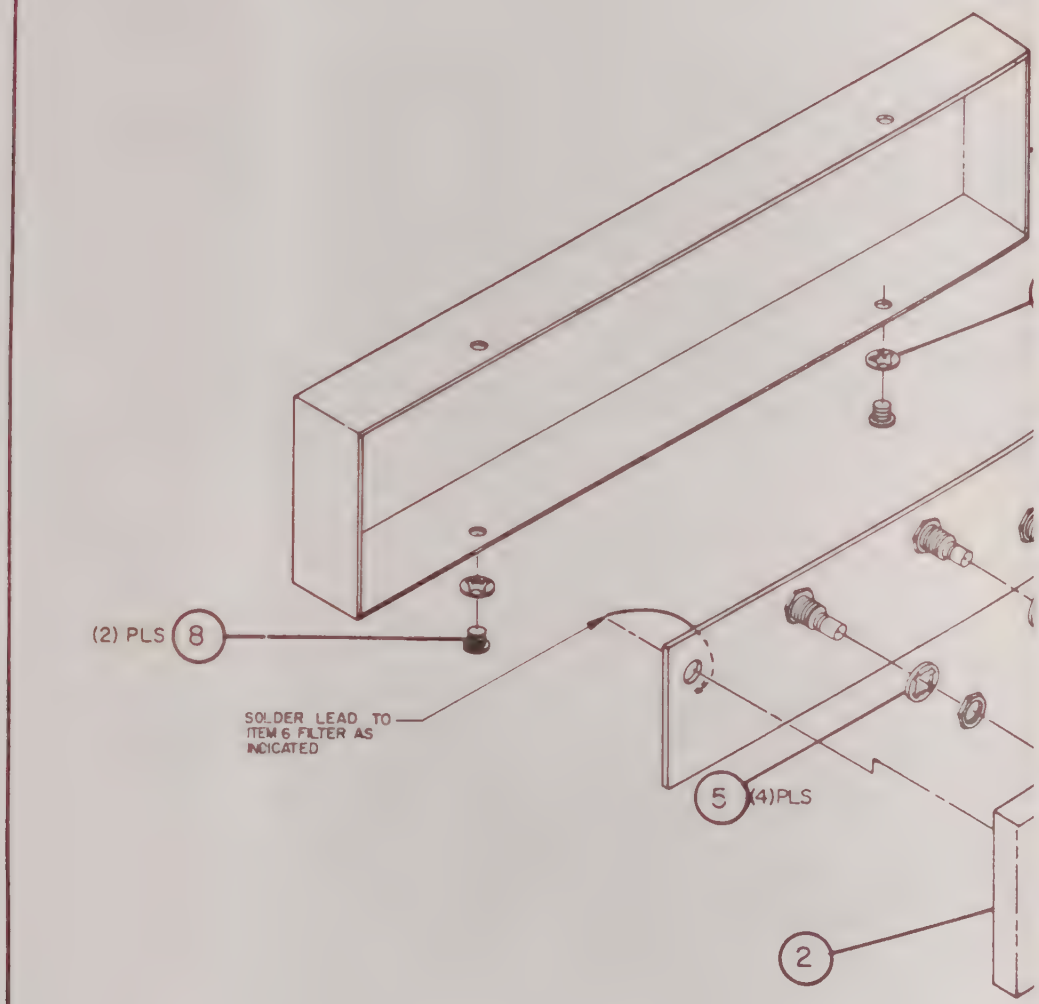
(2) PLS 8
SOLDER LEAD TO ITEM 6 FILTER AS INDICATED
5 (4)PLS
2

DATE	REV	CHANGE	APP'D
11-2-77	C	ORIGINAL RELEASE TT	

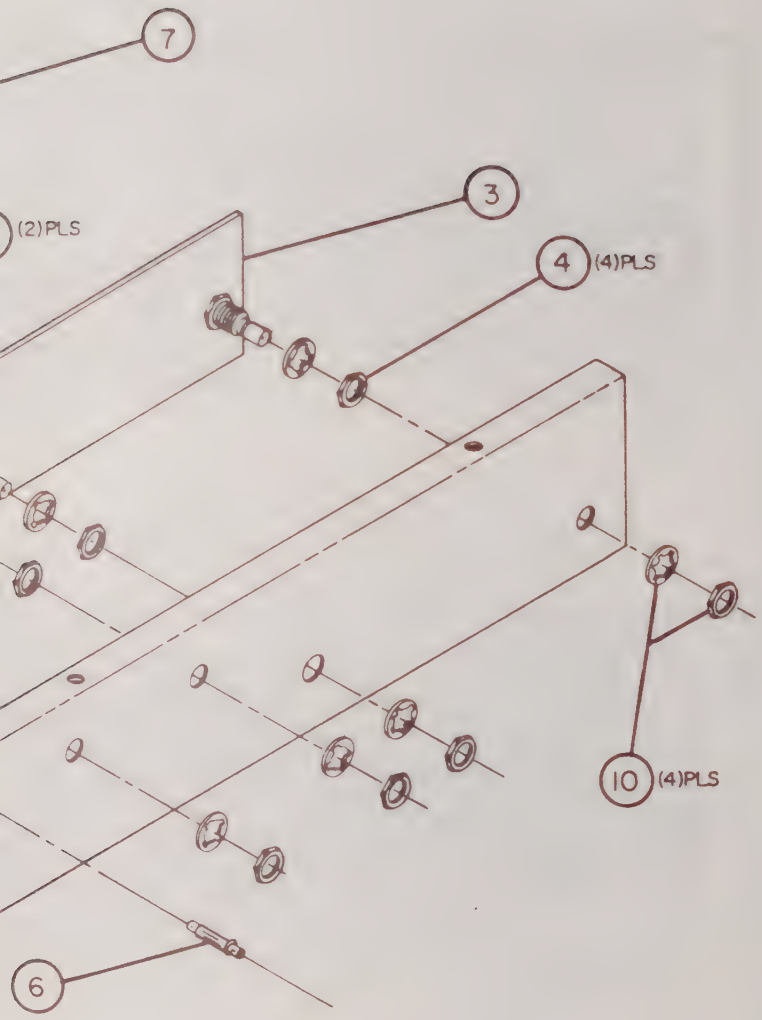

ITEM	REQ'D	PART NO	DESCRIPTION
10	2	———	ITEM 10 NOW PART OF ITEM 3 CONNECTORS
9	2	#4	INT TOOTH LOCKWASHER
8	2	#4-40 x 1/8	PBHMS
7	1	3-23-0151-2	100 MHz AMP & 108MHz PC BD COVER
6	1	SI-708-001	"SPECTRUM CONTROLS"/EQUIV FILTER
5	4	#10	INT TOOTH LOCKWASHER
4	4	#10-32	EXTRA SMALL PATTERN HEX NUT
3	1	1-23-0098	100 MHz AMP & 108MHz PC BD ASSEMBLY
2	1	3-23-0151-1	100MHz AMP & 108MHz PC BD ENCLOSURE
1	1	3-23-0219	100 MHz AMP & 108MHz MIXER ASSEMBLY

LIST OF MATERIALS

FINISH	
MODEL	
QTY	1
NEXT ASS'Y	23-0492
APPLICATION	

TOLERANCES
UNLESS OTHERWISE SPECIFIED
ALL DIMENSIONS ARE(/ AFTER FINISH
DECIMALS .xx = ± .010 .xxx = ± .005
ANGLES ± 1/2°
FRACTIONS ± 1/64
SURFACE ROUGHNESS 125 ✓
REMOVE ALL BURRS

DRAWN TenEyck DATE 11-2-77
CHECKED DATE
APPROVED DATE 11-1-77

MATERIAL
FINISH

- IFR INC -
WICHITA, KANSAS

TITLE
100MHz AMP & 108MHz MIXER ASSEMBLY

SIZE C | PART NUMBER 3-23-0219 | REV C
SCALE FULL | WEIGHT | SHEET 1 OF 1

Figure 6-44

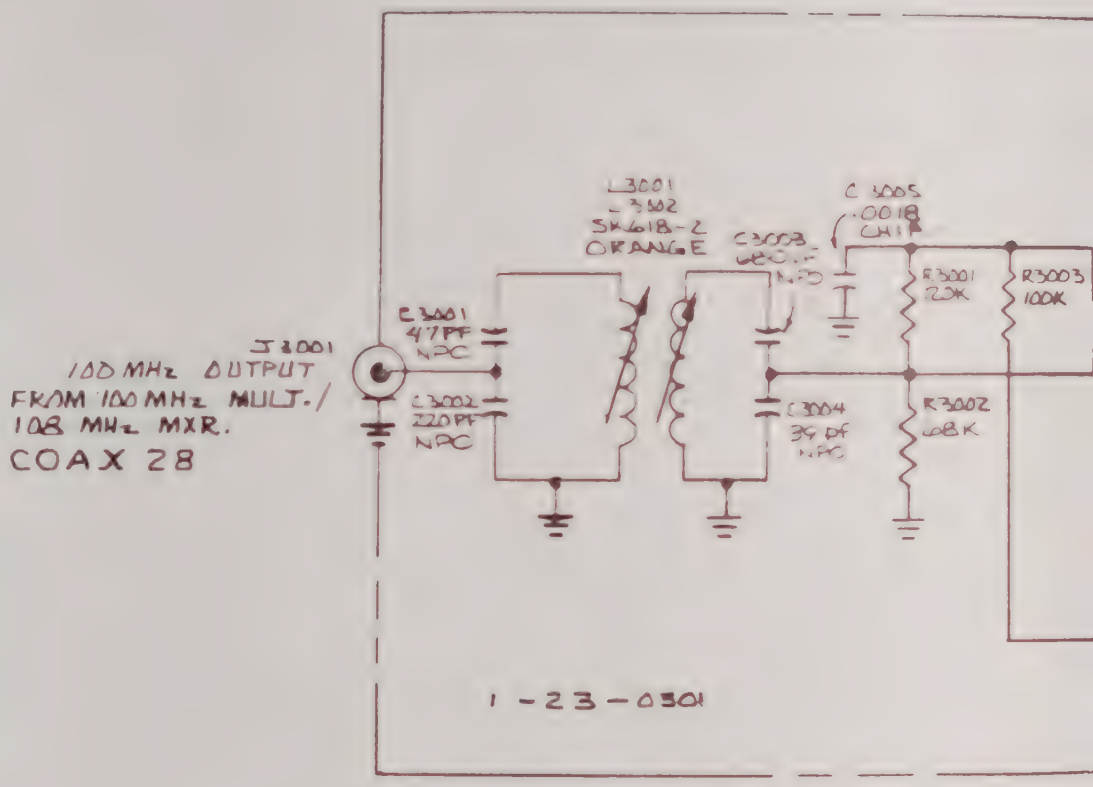
J3001
100 MHz OUTPUT
FROM 100 MHz MULT./
108 MHz MXR.
COAX 28
C3001
47PF
NPO
C3002
220PF
NPO
L3001
-3002
SK618-2
ORANGE
C3003
C3004
39 PF
NPO
C3005
.0018
CHIP
R3001
22K
R3002
68K
R3003
100K
1-23-0301

DATE	REV	CHANGE	APP'D
2/14/75	A	INCORPORATED ECN # 291	
9-5-75	B	INCORPORATED ECN # 983	
3/29/77	C	INCORP. ECN # 1958	
1-18-78	D	INC. ECN 2709	

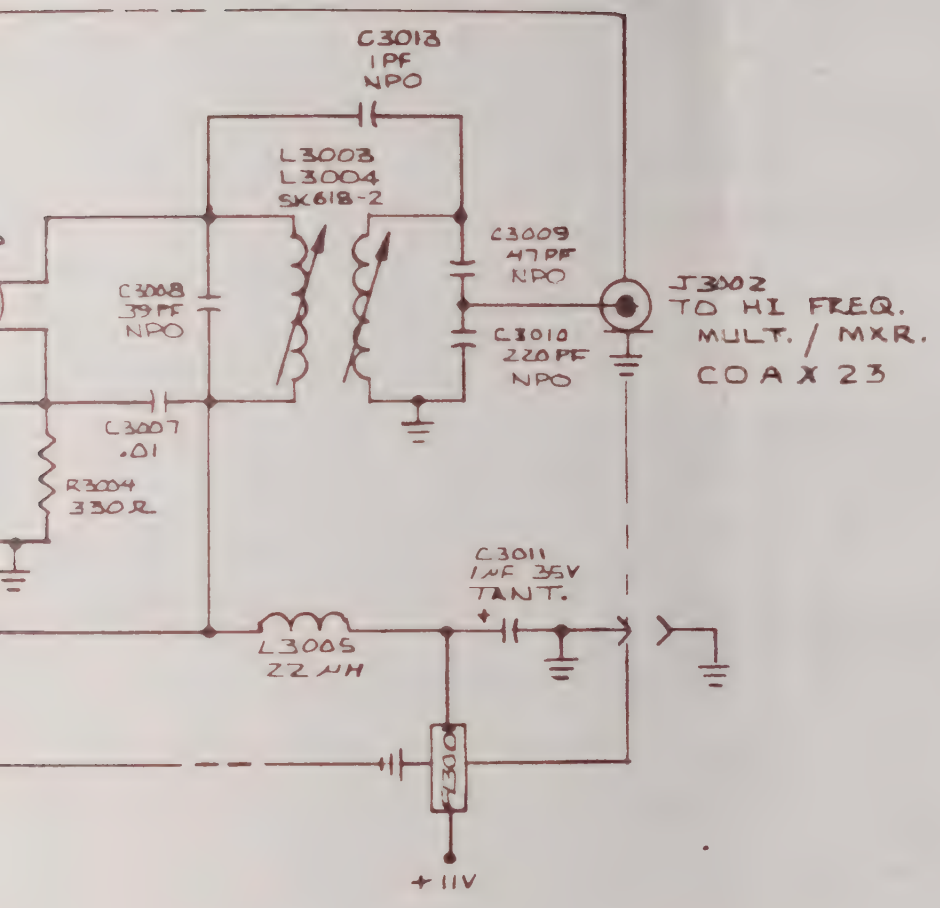

23-0303	—	FM-1000D	1	1	09-0300	SCHEMATIC
NEXT ASS'Y	QT'Y	MODEL	ITEM	REQ'D	PART NO.	DESCRIPTION

APPLICATION — LIST OF MATERIALS

TOLERANCES
UNLESS OTHERWISE SPECIFIED
ALL DIMENSIONS APPLY AFTER FINISH
DECIMALS: ± .005
ANGLES: ± 1/2°
FRACTIONS: ± 1/64
SURFACE ROUGHNESS 125 √
REMOVE ALL BURRS

DRAWN DATE 7-25-74
CHECKED DATE 7-25-74
APPROVED DATE 12 75

INSTRUMENT FLIGHT RESEARCH CORPORATION
WICHITA, KANSAS

TITLE
100MHz FILTER
SCHEMATIC
FM-1000

MATERIAL —
TREATMENT —
FINISH —

SIZE	PART NUMBER	REV
B	2-23-0300	D

SCALE — WEIGHT — SHEET 1 OF 1

23-0301
RTWORK

Figure 6-4

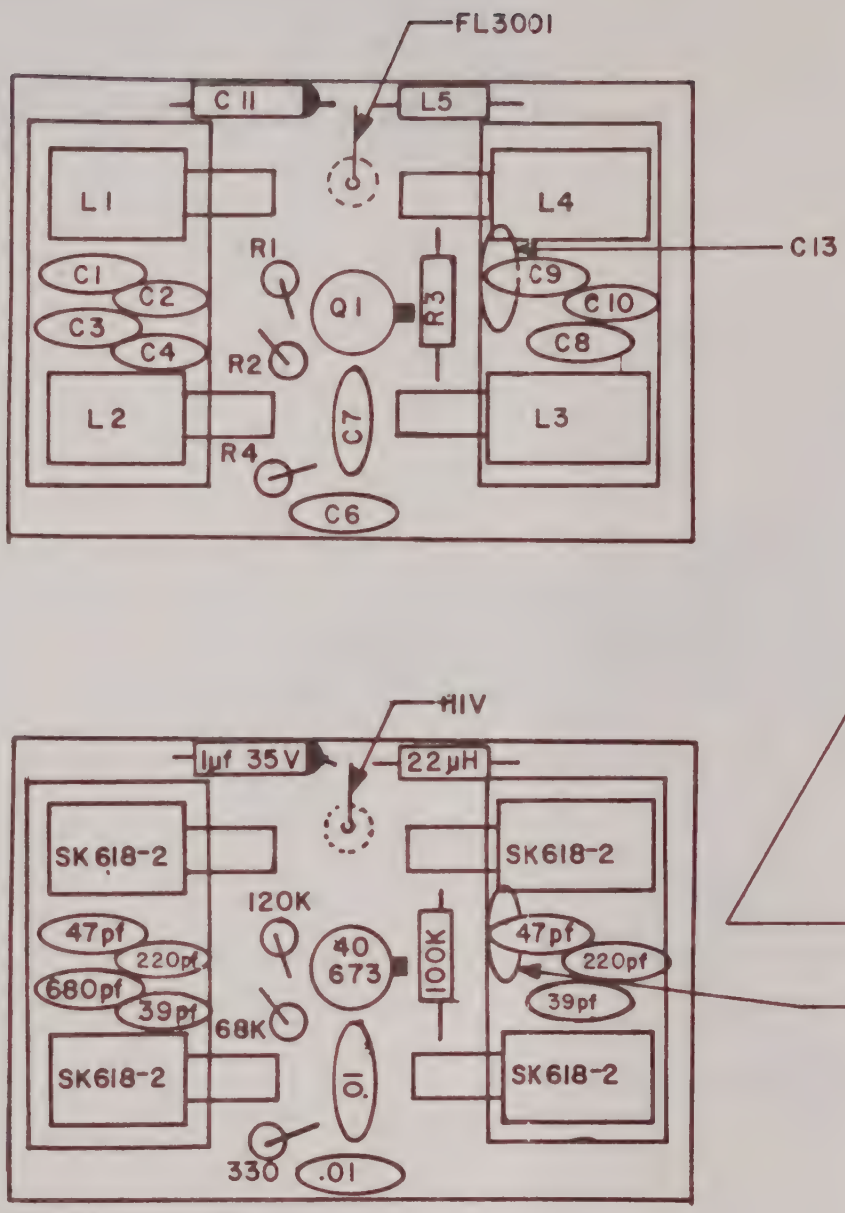

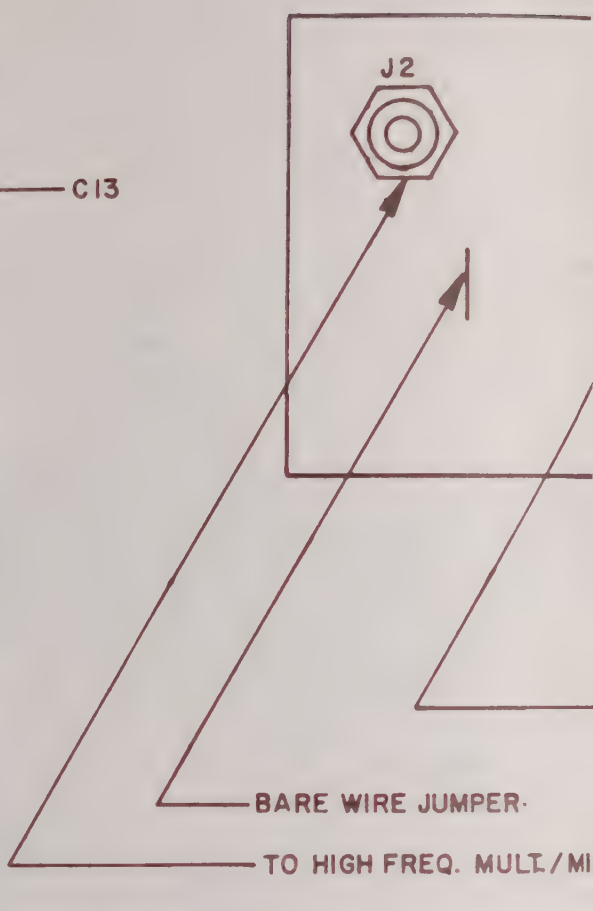

PC BD.: 1-23-0301
SCHEMATIC: 2-23-0300

NOTES:

1. ALL RESISTORS ARE 1/4 W., 10% TOLERANCE EXCEPT AS NOTED.
2. ALL CAPACITOR VALUES ARE IN µF EXCEPT AS NOTED, AND ARE NPO.
3. COMPONENT LEADS MAY EXTEND .04 TO .06 BEYOND BOTTOM OF BOARD AFTER SOLDERING.
4. MAXIMUM HEIGHT OF COMPONENTS TO BE .35 FROM COMPONENT SIDE OF BOARD.
5. PLACE CHIP CAPACITORS ON BACK SIDE OF BOARD.
6. ALL COMPONENT DESIGNATORS HAVE 300 PREFIX; i.e. R3001, Q3001, etc.

DATE	REV	CHANGE	APP'D
8-22-77	D	ORIGINAL RELEASE TJT	
1-18-78	G	INC ECN 2709 JAJ	WW

OM VIEW

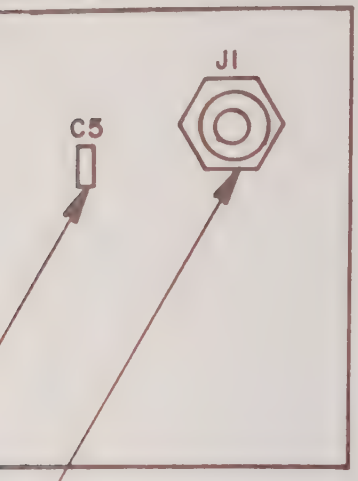

100 MHz OUTPUT FROM 100MHz MULT./108 MHz MIXER COAX 28

.0018 CHIP

ER COAX 23

NEXT ASS'Y	QT'Y	MODEL	ITEM	REQ'D	PART NO.	DESCRIPTION
23-0591	1	FM/AM1000S				
23-0591	1	FM/AM1000A				

APPLICATION | LIST OF MATERIALS

TOLERANCES
UNLESS OTHERWISE SPECIFIED
ALL DIMENSIONS APPLY AFTER FINISH
DECIMALS: ± .008
ANGLES: ± 1/2°
FRACTIONS: ± 1/64
SURFACE ROUGHNESS 125 ✓
REMOVE ALL BURRS

DRAWN TJT DATE 8/22/77
CHECKED DATE
APPROVED DATE

INSTRUMENT FLIGHT RESEARCH CORPORATION
WICHITA, KANSAS

TITLE
100 MHz FILTER PC BOARD ASSEMBLY

MATERIAL
TREATMENT
FINISH

SIZE B | PART NUMBER 2-23-0303 | REV G
SCALE 2:1 | WEIGHT — | SHEET 1 OF 1

Figure 6-46

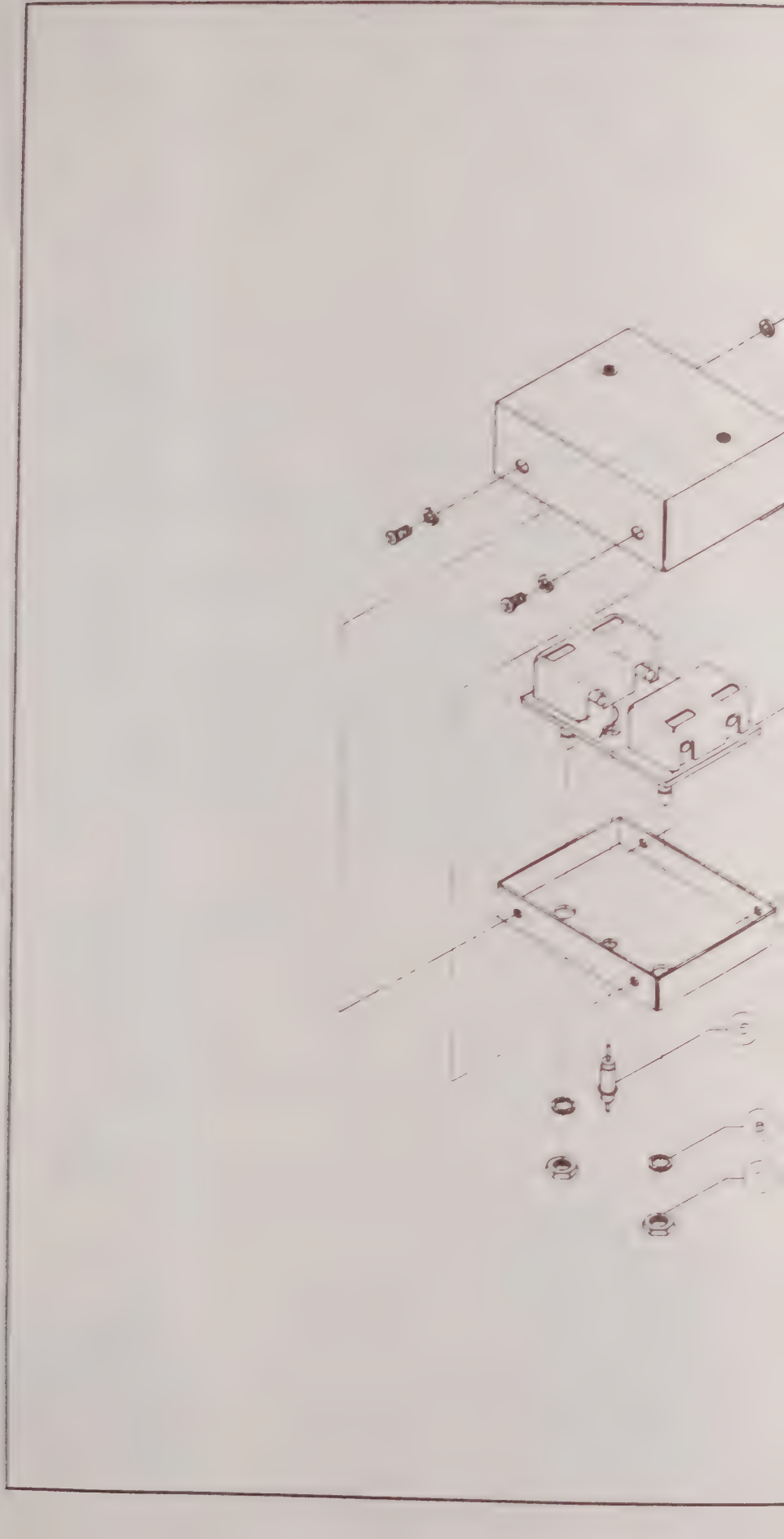

DATE	REV	CHANGE	APP'D
12/12/77	C	ORIGINAL RELEASE	[illegible]

ITEM	REQ'D	PART NO.	DESCRIPTION
10	4	#4	INT. TOOTH LOCKWASHER
9	4	#4-40 x 3/16	PBHMS
8	2	#10	INT TOOTH LOCKWASHER
7	2	#10-32	EXTRA SMALL PATT. HEX-NUT
5	1	51-708-001	FEEDTHRU FILTER "SPECTRUM CONT."
4	1	1-23-0303	100 MHz FILT. BD ASSY
3	1	2-23-0592-2	HOUSING COVER
2	1	2-23-0592-1	HOUSING BASE
1	1	1-23-0591	100 MHz FILTER ASS'Y

LIST OF MATERIALS

1-23-0578	1	NEXT ASSY	QTY
		MODEL	
APPLICATION			

TOLERANCES
UNLESS OTHERWISE SPECIFIED
ALL DIMENSIONS APPLY AFTER FINISH
DECIMALS: .XX = ± .010 .XXX = ± .005
ANGLES: ± 1/2°
FRACTIONS: ± 1/64
SURFACE ROUGHNESS 125 J
REMOVE ALL BURRS

DRAWN [illegible] DATE 12/12/77
CHECKED [illegible] DATE 12/12/77
APPROVED [illegible] DATE 12/30/77

MATERIAL
FINISH

- IFR INC -
WICHITA, KANSAS

TITLE
100 MHz FILTER ASSY

SIZE C | PART NUMBER 3-23-0591 | REV C
SCALE 1:1 | WEIGHT | SHEET 1 OF 1

Figure 6-47

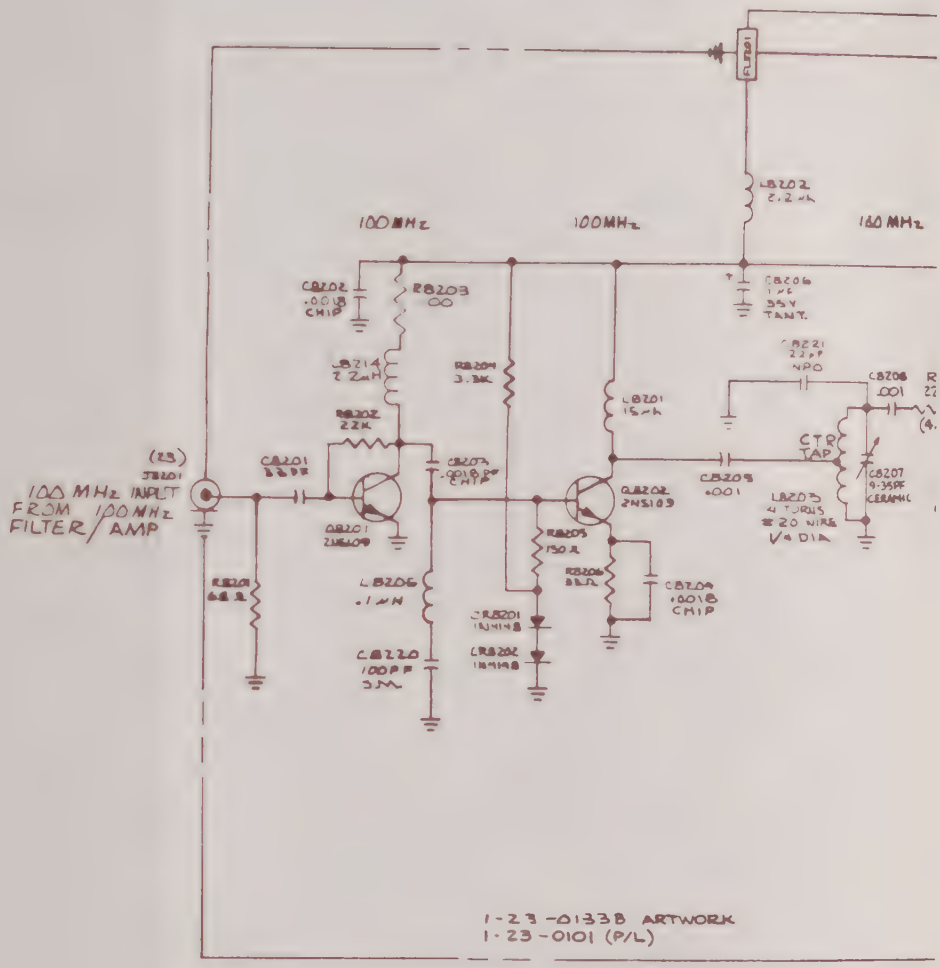

1-23-0133B ARTWORK
1-23-0101 (P/L)

NOTE:
ALL UN MARKED DIODES ARE MA47047

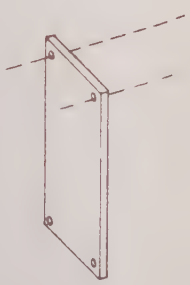

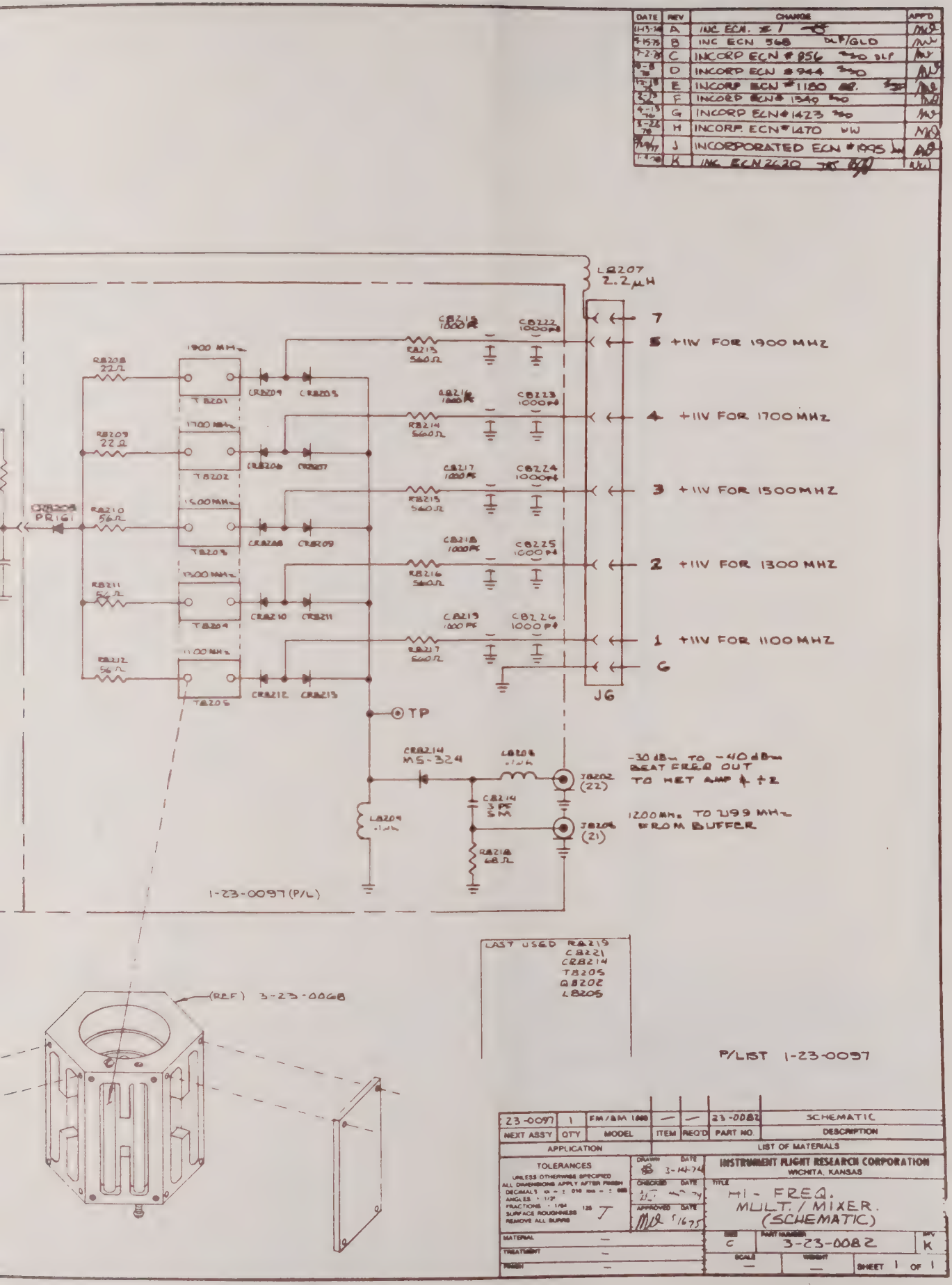
DATE REV CHANGE APP'D
A INC ECN. # 1
B INC ECN 568 DLF/GLD
C INCORP ECN # 856 DLF
D INCORP ECN # 944
E INCORP ECN # 1180
F INCORP ECN # 1349
G INCORP ECN # 1423
H INCORP. ECN # 1470
J INCORPORATED ECN # 1995
K INC. ECN 2420
LB207 2.2 µH
7
5 +11V FOR 1900 MHZ
4 +11V FOR 1700 MHZ
3 +11V FOR 1500 MHZ
2 +11V FOR 1300 MHZ
1 +11V FOR 1100 MHZ
G
JG
1900 MHz
1700 MHz
1500 MHz
1300 MHz
1100 MHz
TB201
TB202
TB203
TB204
TB205
RB208 22Ω
RB209 22Ω
RB210 56Ω
RB211 56Ω
RB212 56Ω
RB213 560Ω
RB214 560Ω
RB215 560Ω
RB216 560Ω
RB217 560Ω
CB218 1000 PF
CB219 1000 PF
CB220 1000 PF
CB221 1000 PF
CB222 1000 PF
CB223 1000 PF
CB224 1000 PF
CB225 1000 PF
CB226 1000 PF
CRB208 PRIG1
CRB209 CRB210 CRB211 CRB212 CRB213
TP
CRB214 MS-324
LB208 .1µH
LB209 .1µH
CB214 3 PF S M
RB218 68Ω
TB202 (22)
TB204 (21)
-30 dBm TO -40 dBm BEAT FREQ OUT TO MET AMP & TZ
1200 MHz TO 1199 MHz FROM BUFFER
1-23-0097 (P/L)
(REF) 3-23-0068
LAST USED RB219 CB221 CRB214 TB205 QB202 LB205
P/LIST 1-23-0097
23-0097 1 FM/AM 1680 — — 23-0082 SCHEMATIC
NEXT ASSY QTY MODEL ITEM REQ'D PART NO. DESCRIPTION
APPLICATION LIST OF MATERIALS
TOLERANCES
UNLESS OTHERWISE SPECIFIED ALL DIMENSIONS APPLY AFTER FINISH DECIMALS .xx ± .010 .xxx ± .005 ANGLES ± 1/2° FRACTIONS ± 1/64 SURFACE ROUGHNESS 125 REMOVE ALL BURRS
DRAWN DATE 3-14-74
CHECKED DATE
APPROVED DATE 5/16/75
MATERIAL —
TREATMENT —
FINISH —
INSTRUMENT FLIGHT RESEARCH CORPORATION WICHITA, KANSAS
TITLE HI - FREQ. MULT. / MIXER. (SCHEMATIC)
SIZE C PART NUMBER 3-23-0082 REV K
SCALE — WEIGHT —
SHEET 1 OF 1

Figure 6-48

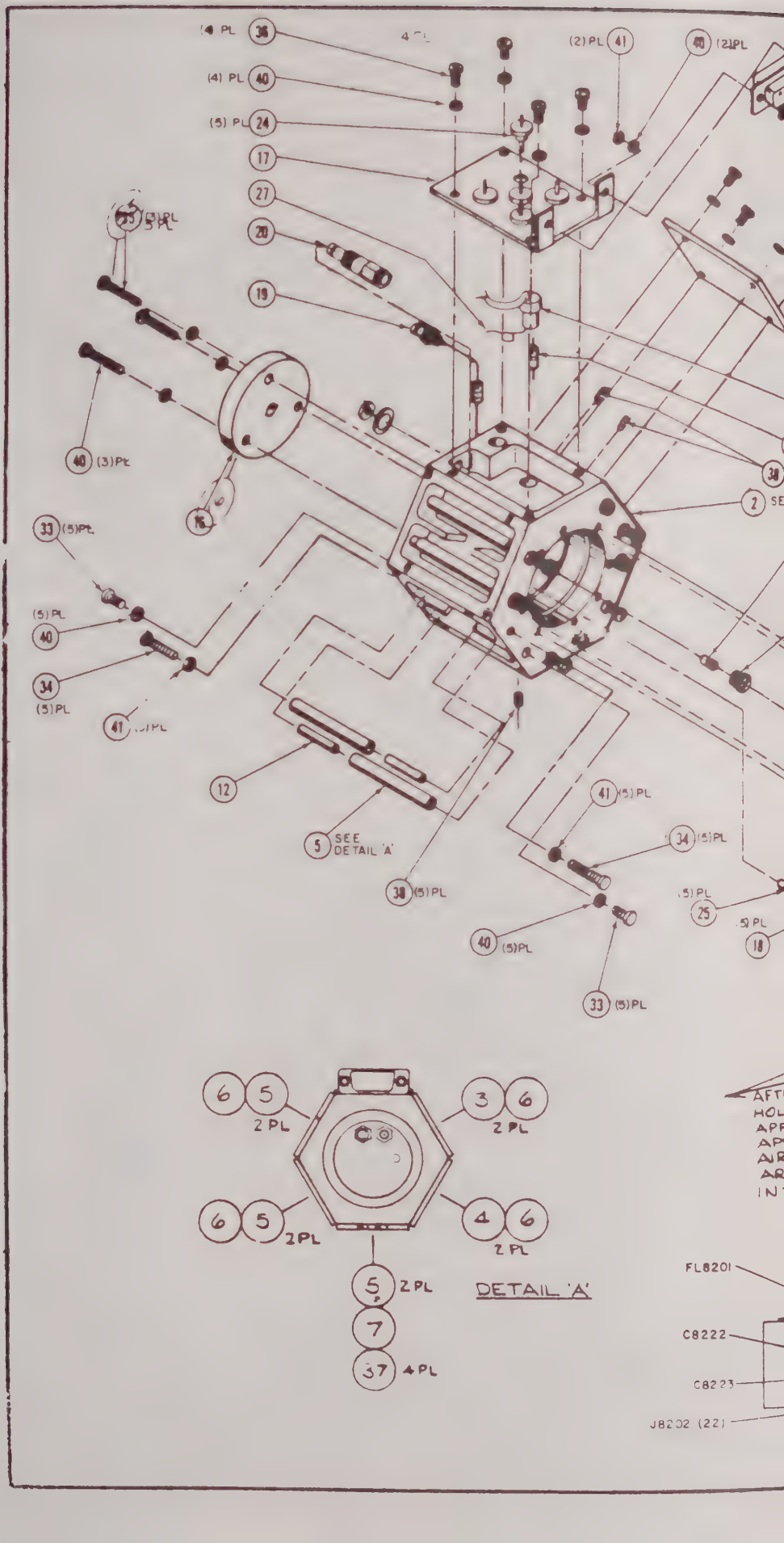

(4) PL 36
(4) PL 40
(5) PL 24
17
27
20
19
(2) PL 41
40 (2) PL
40 (3) PL
33 (5) PL
(5) PL 40
34 (5) PL
41
12
5 SEE DETAIL 'A'
38 (5) PL
41 (5) PL
34 (5) PL
40 (5) PL
33 (5) PL
25
18
2 SE
6 5 2 PL
3 6 2 PL
6 5 2 PL
4 6 2 PL
5 2 PL
7
37 4 PL
DETAIL 'A'
FL8201
C8222
C8223
J8202 (22)

DATE	REV	CHANGE	APP'D
4-13-76	A	INCORP ECN# 1427 WW 5/30	[illegible]
[illegible]	B	INCORP ECN No. 1998 JM RKK	[illegible]
[illegible]	M	INC ECN NO 2623 [illegible]	[illegible]
[illegible]	K	INC ECN NO. 2990 [illegible]	WW

...ENING ITEM 39 SCREWS,
...EM 13 & 14 TO ITEM 2,
...ATS ITEM 44 PAINT AND
...EDGES OF ITEMS 13 & 14.
... ADEQUATELY VENTILATED
...RVE MANUFACTURERS
...ONS.)

...8201 (23)

—C8226

—C8224

—C8225

—J8203 (21)

ITEM	REQ'D	PART NO	DESCRIPTION
45	1	#2	FLATWASHER
44	A/R	22-246	[illegible]
43	2	#2-56 x 1/8	PBHMS
42	8	#2	INT TOOTH LOCKWASHER
41	12	#4-40	SM PATTERN HEX NUT
40	35	#4	INT TOOTH LOCKWASHER
39	8	#2-56 x 1/4	PBHMS
38	8	#2-56 x 1/4	SOCKET HD SET SCREW
37	4	#4-40 x 1/4	PPHMS
36	20	#4-40 x 1/4	PBHMS
35	3	#4-40 x 1/4	PBHMS
34	10	#4-40 x 1/4	PBHMS
33	10	#4-40 x 1/4	PBHMS
32	1	MS324	SOL. TRON/EQUIV DIODE
31	10	PS0-83	PARAMETRICS/EQUIV DIODE
30		PR-161	PARAMETRICS/EQUIV DIODE
29	1	1025-[illegible]	[illegible]
28	1	[illegible]	[illegible]
27	1	[illegible]	[illegible]
26	2	1025-[illegible]	DELEVAN/EQUIV CHOKE [illegible]
25	5	[illegible]	[illegible]
24	10	[illegible]	[illegible]
23	2	[illegible]	SHELL NUT
22	7	205201-5	AMP/EQUIV FEMALE CRMP PIN
21	1	[illegible]	AMP/EQUIV, 9 POS FEMALE CONN
20	1	[illegible]	AMERICON/EQUIV COAX CONN MALE SMB
19	1	[illegible]	AMERICON/EQUIV COAX CONN MALE SMB
18	3	[illegible]	BUSHING
17	1	[illegible]	SIDE COVER
16	1	[illegible]	END COVER
15	1	[illegible]	COAX TERMINATION BUSHING
14	1	1-23-0162	RF SHIELD
13	1	1-23-0101	HIGH FREQ MULT MIXER AMP BD ASS'Y
12	A/R	A/R	TEFLON SLEEVING
11	1	1-14-0278	PLUG
10	3	RC07GF-560K	ALLEN BRADLEY/EQUIV RESISTOR 1/4 W 10% 56 Ω
9	1	1-23-0072	GROUNDING DISC
8	2	[illegible]	[illegible]
7	1	[illegible]	SIDE COVER
6	4	[illegible]	SIDE COVER
5	6	[illegible]	TUNING POLE
4	2	[illegible]	TUNING POLE
3	2	[illegible]	TUNING POLE
2	1	23-0068	HIGH FREQ MULT MIXER BLOCK
1	1	23-0631	ASS'Y

LIST OF MATERIALS

NEXT ASSY	QTY	MODEL
23-064		FM/AM 1000S
23-0582		FM/AM 1000A

APPLICATION

WIRING LIST				
ITEM	FROM	TO	COLOR	GA
1	J6-1	C8226	GRN	26
2	J6-2	C8225	BRN	26
3	J6-3	C8224	[illegible] WH	26
4	J6-4	C8223	[illegible] WH	26
5	J6-5	C8222	[illegible] WH	26
6	J6-6	[illegible]	BLACK	22
7	J6-7	C8207	RED WH	22

TOLERANCES
UNLESS OTHERWISE SPECIFIED
ALL DIMENSIONS APPLY AFTER FINISH
DECIMALS .XX ± 1/32, .XXX ± 1/64
ANGLES ± 1/2°
FRACTIONS ± 1/32
SURFACE ROUGHNESS 125 J
REMOVE ALL BURRS

MATERIAL SEE L/M

INSTRUMENT FLIGHT RESEARCH CORPORATION
WICHITA, KANSAS

TITLE HIGH FREQUENCY MULT/MIXER BLOCK - ASSY

SIZE C | PART NUMBER 3-23-0097 | REV

SCALE — | SHEET 1 OF 1

Figure 6-40

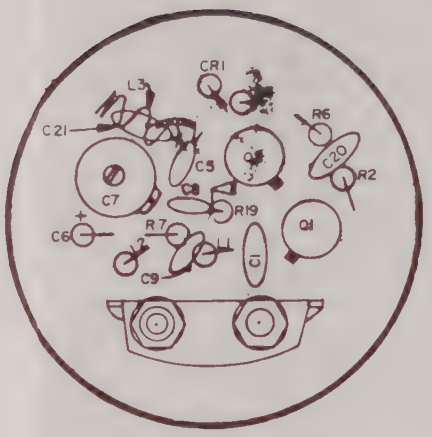

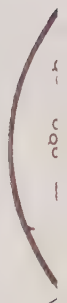

*2-56
SM PATT.
HEX NUT
(2) PLS

SOLDER
TO COIL
CAPACIT
INSIDE C
COIL TO
PLANE.

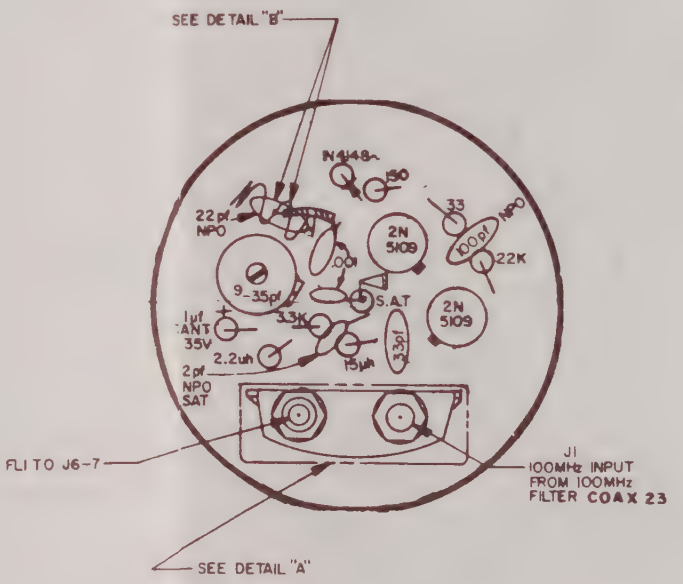

NOTE

DATE	REV	CHANGE	APP'D
12-20-77	E	ORIGINAL RELEASE	
1-17-78	J-1	INC ECN 2709	
8-5-78	R	INC ECN 2991 TenEyck	

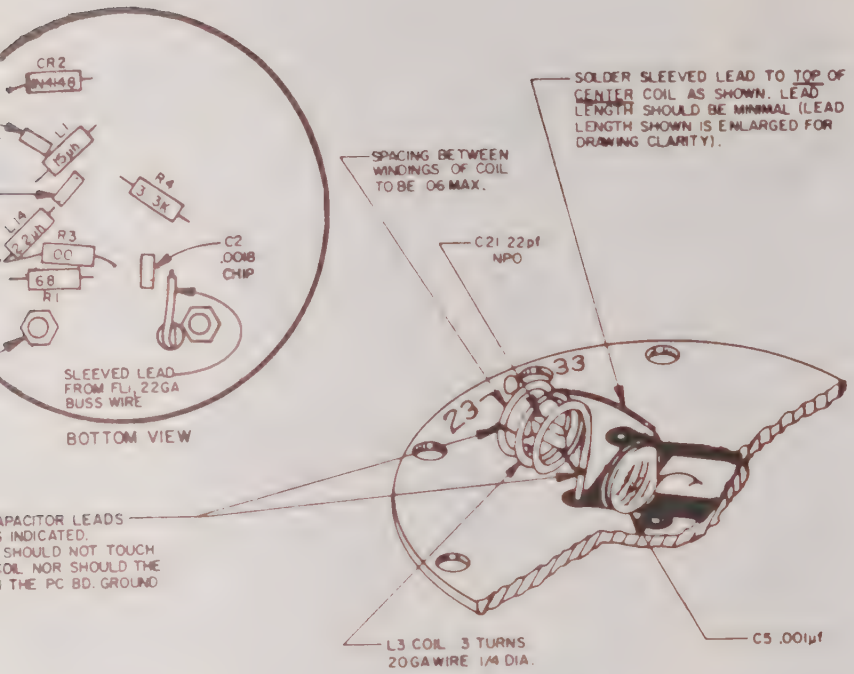

DETAIL B

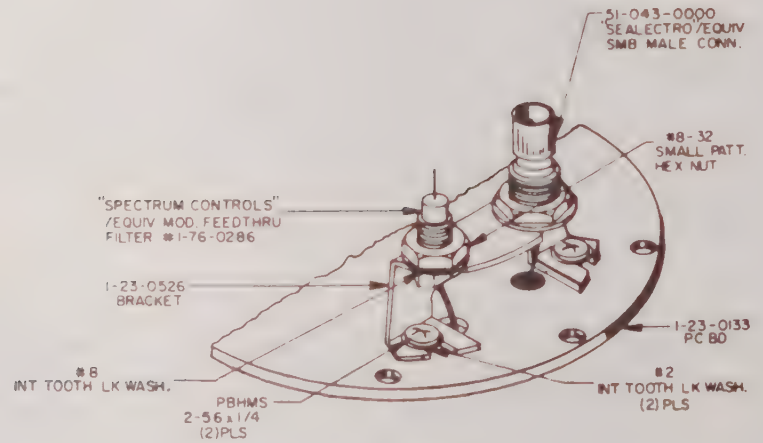

DETAIL A

OTE 4 DOES NOT APPLY TO COMPONENTS SHOWN IN DETAIL A.
INDICATES LEADS OF MINIMUM LENGTH.
CHEMATIC NO. 3-23-0082.
AX. HEIGHT OF COMPONENTS TO BE .37 FROM
OMPONENT SIDE OF BOARD AND .15 FROM BOT. SIDE OF BD.
OMPONENT LEADS MAY EXTEND .04 TO .06
EYOND BOTTOM OF BOARD AFTER SOLDERING.
OMPONENT DES. HAVE 82 PREFIX i.e C8201, L8201 etc.
LL CAPACITORS ARE IN μf EXCEPT AS NOTED.
LL RESISTORS ARE 1/4W, 10% TOL. EXCEPT AS NOTED.

ITEM	REQ'D	PART NO	DESCRIPTION

LIST OF MATERIALS

FM/AM 10008	FM/AM 10009A	MODEL
1	1	QTY
23-0641	23-0682	NEXT ASSY

APPLICATION

TOLERANCES
UNLESS OTHERWISE SPECIFIED
ALL DIMENSIONS APPLY AFTER FINISH
DECIMALS .xx ± .010 .xxx ± .005
ANGLES ± 1/2°
FRACTIONS ± 1/64
SURFACE ROUGHNESS 125
REMOVE ALL BURRS

MATERIAL
FINISH

DRAWN TenEyck DATE 12-20-77
CHECKED DATE
APPROVED DATE

-IFR INC-
WICHITA, KANSAS

TITLE
HIGH FREQUENCY MULTIPLIER
MIXER AMPLIFIER
P. C. BOARD ASSEMBLY

SIZE C | PART NUMBER 23-0101 | REV R
SCALE 2:1 | WEIGHT | SHEET 1 OF 1

Figure 6-50

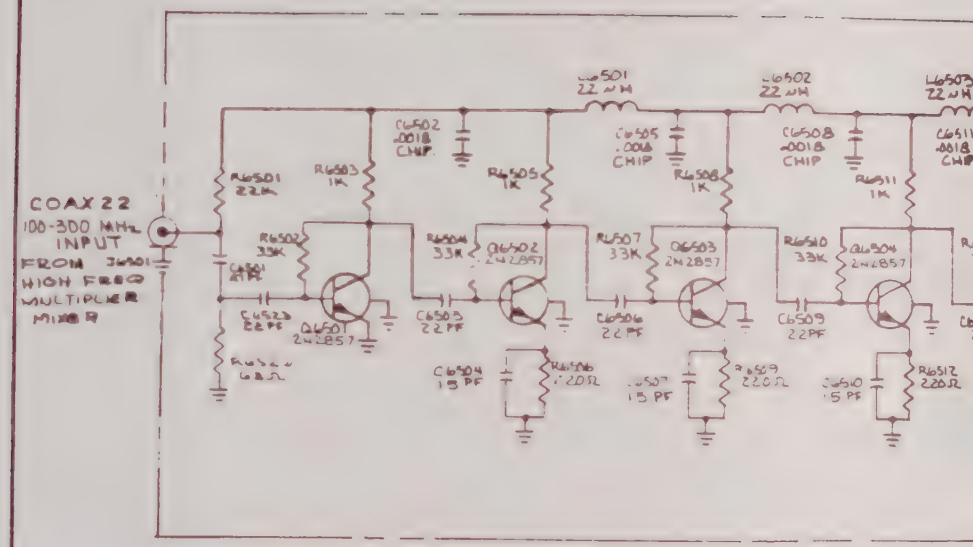
COAX 22
100-300 MHz
INPUT
FROM J6501
HIGH FREQ
MULTIPLIER
MIXER
L6501
22 NH
L6502
22 NH
C6502
.001B
CHIP
C6505
.001B
CHIP
C6508
.001B
CHIP
R6501
22K
R6503
1K
R6505
1K
R6508
1K
R6511
1K
R6502
33K
R6504
33K
R6507
33K
R6510
33K
Q6501
2N2857
Q6502
2N2857
Q6503
2N2857
Q6504
2N2857
C6501
47PF
C6503
22PF
C6506
22PF
C6509
22PF
C6504
15 PF
C6507
15 PF
C6510
15 PF
R6506
220Ω
R6509
220Ω
R6512
220Ω

DATE	REV	CHANGE	APP'D
2-11-74	A	INC. ECN # 1	
7/1/75	B	INCORP ECN # 719 GLD	
11-12	C	INCORP ECN # 1106	
2-12	D	INCORP ECN # 1434	
2-12-77	E	INC. ECN # 1941	
1-19-79	F	INC ECN 2209	

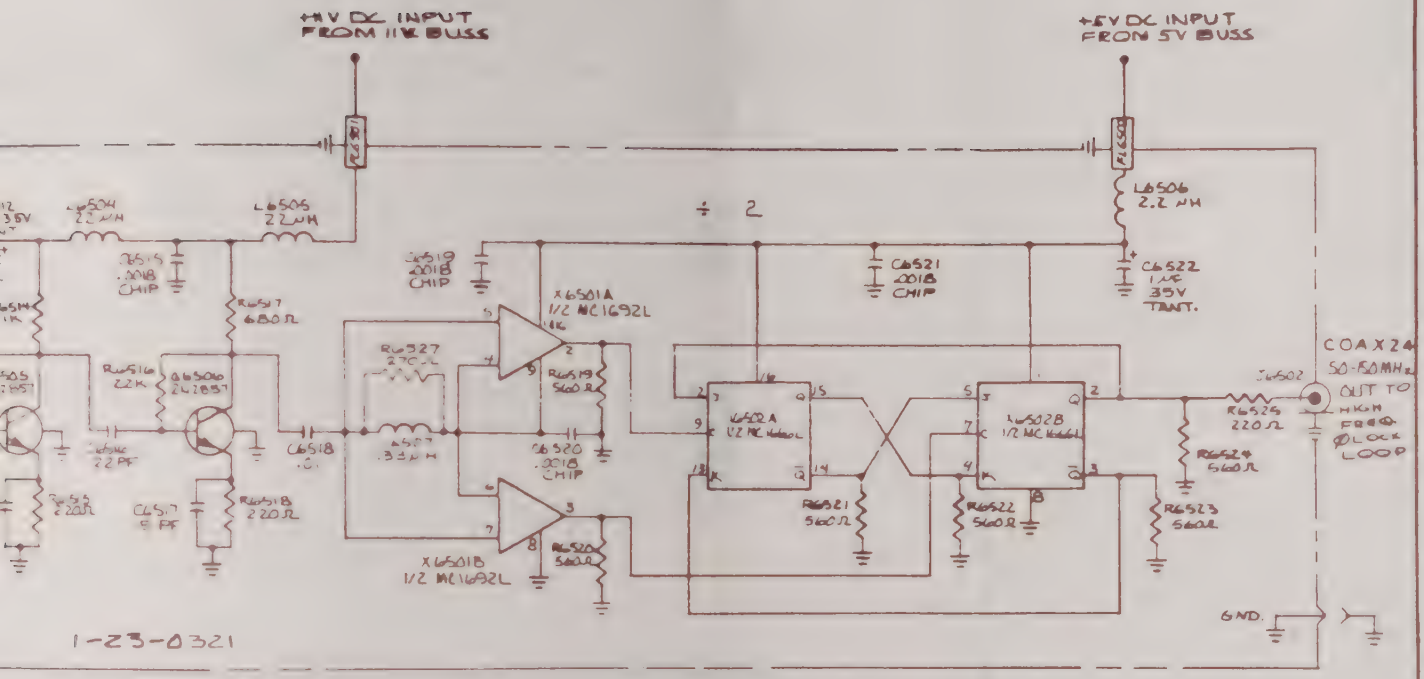

EFFECTIVE: FM AM1000A THRU S/N 1169

23-0092	1	FM/AM 1000A/B	-	1	23-0065	SCHEMATIC
NEXT ASS'Y	QTY	MODEL	ITEM	REQ'D	PART NO.	DESCRIPTION

APPLICATION — LIST OF MATERIALS

TOLERANCES
UNLESS OTHERWISE SPECIFIED
ALL DIMENSIONS APPLY AFTER FINISH
DECIMALS .XX ± .010 .XXX ± .005
ANGLES ± 1/2°
FRACTIONS ± 1/64
SURFACE ROUGHNESS 125
REMOVE ALL BURRS

DRAWN 8-17-74
CHECKED 2-19-79
APPROVED 2-22-79

MATERIAL
TREATMENT
FINISH

INSTRUMENT FLIGHT RESEARCH CORPORATION
WICHITA, KANSAS

TITLE: HETERODYNE AMP AND ÷ 2 PRESCALER SCHEMATIC

SIZE B | PART NUMBER 3-23-0065 | REV F
SCALE | WEIGHT | SHEET 1 OF 1

2. ONLY "RCA" TRANSISTERS MAY BE USED UNLESS OTHERWISE NOTED.
1. UNLESS OTHERWISE SPECIFIED ALL CAPS. ARE NPO TYPE.

NOTES:

Figure 6-51

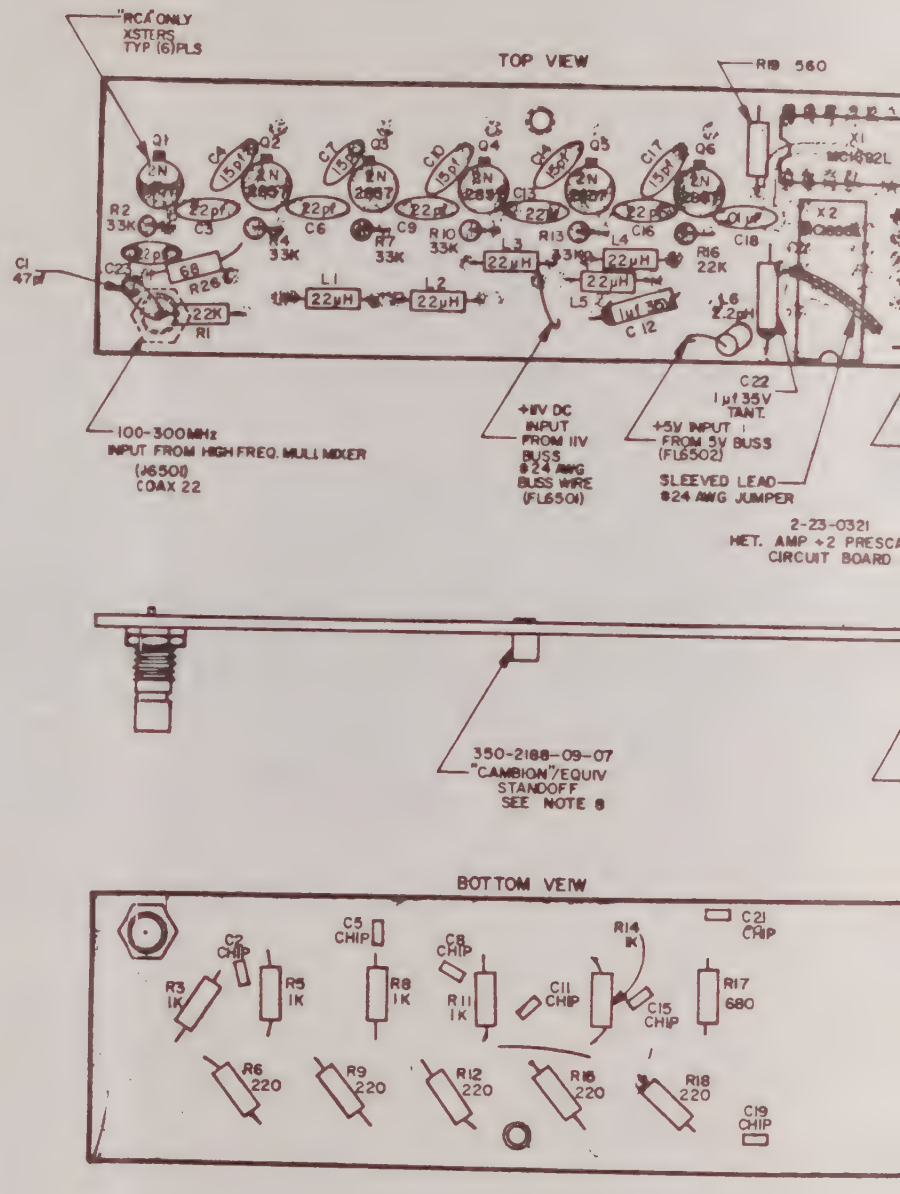
"RCA" ONLY XSTRS TYP (6) PLS
TOP VIEW
R19 560
Q1
Q2
Q3
Q4
Q5
Q6
2N 2857
R2 33K
C3 22pf
R4 33K
C6 22pf
R7 33K
C9 22pf
R10 33K
C13 22pf
R13 33K
C16 22pf
R16 22K
C18 .01µf
X1
X2
C1 47pf
C23 22pf
R26 68
R1 22K
L1 22µH
L2 22µH
L3 22µH
L4 22µH
L5 22µH
L6 2.2µH
C12 1µf 35V
C22 1µf 35V TANT.
100-300MHz INPUT FROM HIGH FREQ. MULTI MIXER (A6501) COAX 22
+11V DC INPUT FROM 11V BUSS #24 AWG BUSS WIRE (FL6501)
+5V INPUT FROM 5V BUSS (FL6502)
SLEEVED LEAD #24 AWG JUMPER
2-23-0321
HET. AMP ÷2 PRESCA
CIRCUIT BOARD
350-2188-09-07
"CAMBION"/EQUIV
STANDOFF
SEE NOTE 8
BOTTOM VIEW
C7 CHIP
C5 CHIP
C8 CHIP
R14 1K
C21 CHIP
R3 1K
R5 1K
R8 1K
R11 1K
C11 CHIP
C15 CHIP
R17 680
R6 220
R9 220
R12 220
R15 220
R18 220
C19 CHIP

DATE	REV	CHANGE	APP'D
1-23-78	J	ORIGINAL RELEASE T.T.	DH

10. ALL CHIP CAPACITORS ARE .0018 µf EXCEPT AS NOTED.
9. MAX. HEIGHT OF COMPONENTS TO BE .12 FROM BOTTOM SIDE OF BOARD.
8. INSTALL NO. 350-2188-09-07 "CAMBION"/EQUIV STANDOFF FROM BOTTOM SIDE OF BOARD.
7. SCHEMATIC NO. 3-23-0065.
6. INSTALL NO. 17-0204-000 "AEP"/EQUIV SMB MALE CONN. (2)PLS FROM BOTTOM SIDE OF BOARD.
5. CHIP CAPS. ARE ON BOTTOM OF BD. UNLESS NOTED.
4. MAX. HEIGHT OF COMPONENTS TO BE .35 FROM COMPONENT SIDE OF BOARD.
3. COMPONENT LEADS MAY EXTEND .04 TO .06 BEYOND BOTTOM OF BOARD AFTER SOLDERING.
2. ALL CAPACITORS ARE NPO TYPE EXCEPT AS NOTED.
1. ALL RESISTORS ARE 1/4W, 10% TOL. EXCEPT AS NOTED.

NOTES:

EFFECTIVE: FM/AM1000A thru S/N1169

ITEM	REQ'D	PART NO.	DESCRIPTION

LIST OF MATERIALS

MODEL	FM/AM 1000A/B	TOLERANCES UNLESS OTHERWISE SPECIFIED ALL DIMENSIONS APPLY AFTER FINISH DECIMALS .XX = ± .010 .XXX = ± .005 ANGLES ± 1/2° FRACTIONS ± 1/64 SURFACE ROUGHNESS 125 ✓ REMOVE ALL BURRS	DRAWN TEN EYCK DATE 1-23-78
QTY	1		CHECKED DATE
NEXT ASSY	23-0225		APPROVED DATE
APPLICATION		MATERIAL	- IFR INC - WICHITA, KANSAS
		FINISH	TITLE HET. AMP ÷2 PRESCALER PC BOARD ASSEMBLY
			SIZE C · PART NUMBER 3-23-0092 · REV J
			SCALE 2:1 · WEIGHT — · SHEET 1 OF 1

Figure 6-52

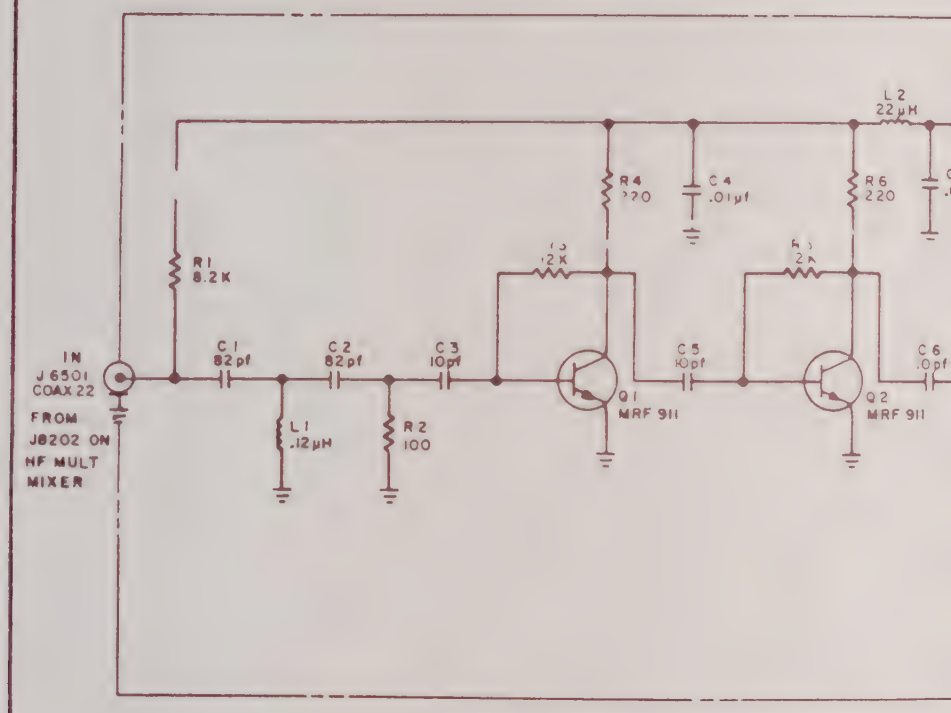
IN
J 6501
COAX 22
FROM
J8202 ON
HF MULT
MIXER
C1
82 pf
C2
82 pf
C3
10pf
L1
.12µH
R1
8.2K
R2
100
R4
220
C4
.01µf
L2
22µH
R6
220
C5
10pf
Q1
MRF 911
Q2
MRF 911

DATE	REV	CHANGE	APP'D
[illegible]	A	INC ECN 2949 JAJ	WW
[illegible]	A	INC ECN 2949 JGF	WW

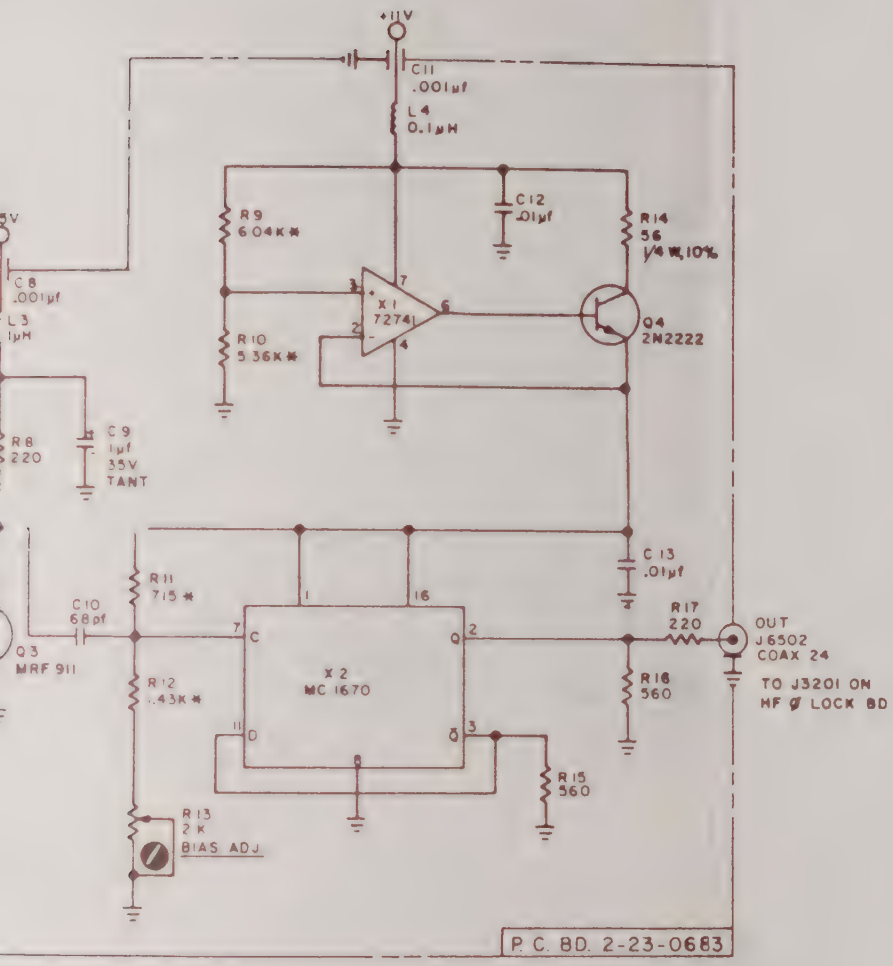

EFFECTIVE: FM/AM1000A S/N 1170 & ON

3. "*" DENOTES 1/4 W, 1% TOL. RES.
2. THOSE CAPACITORS CALLED OUT IN PF ARE NPOS
1. ALL RES. ARE 1/8 W, 10% TOL. EXCEPT AS NOTED.

NOTES:

3-23-0685 HET. AMP. ÷2 PRESCALER

WICHITA, KANSAS

HET. AMP.
÷2 PRESCALER

SIZE C | PART NUMBER 3-23-0685 | A

SHEET 1 OF 1

Figure 6-53

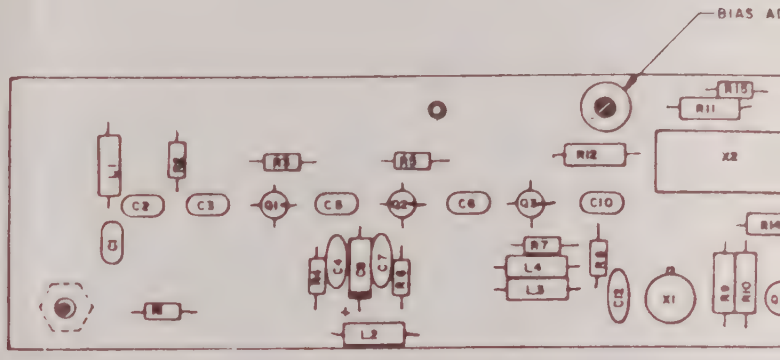

REF DWG

PC BOARD 2-23-0683

SCHEMATIC 3-23-0685

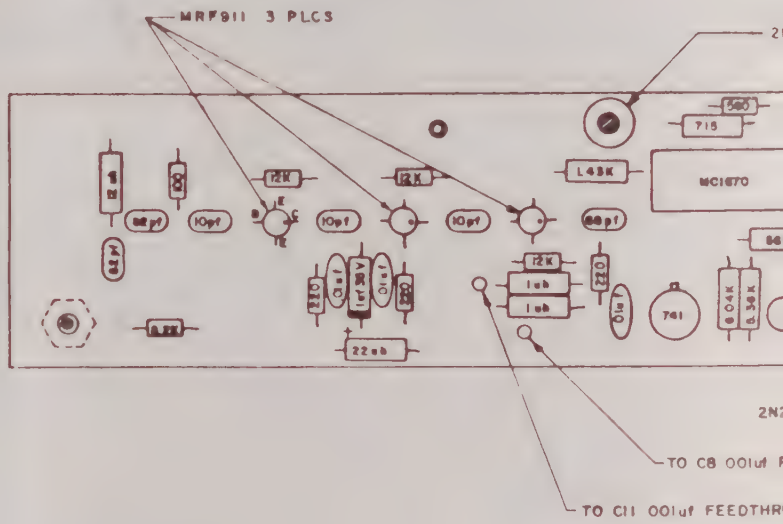

NOTES

1 C1 – C3,5,6,10 ARE NPO CAPS

2 R1 THRU R8, R15 THRU R17 ARE 1/8W ,10%

3 R14 IS 1/4W ,10%

4 R9,10,11,12 ARE 1/4W , 1%

5 COMPONENT LEADS MAY EXTEND 04 - 06 BEYOND BOTTOM OF BOARD AFTER SO

6 MAXIMUM HEIGHT OF COMPONENTS TO BE .35 FROM COMPONENT SIDE OF BOAR

DATE	REV	CHANGE	APP'D

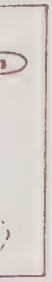

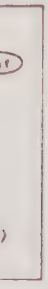

CAP

J6502 COAX 24 TO
J3201 ON HF @ LOCK BD

5 2 PLCS

EFFECTIVE: 1000A S/N 1170 & ON

ITEM	REQ'D	PART NO	DESCRIPTION
12			
11			
10	1	350-2188-09-07	STANDOFF "CAMBION"/EQUIV
9			
8	A/R	AWG 26	SLEEVING
7	A/R	AWG 26	BUSS WIRE
6			
5	2	17-0204-000	CONNECTOR "AEP"/EQUIV
4			
3	REF	3-23-0685	SCHEMATIC
2	1	2-23-0683	PC BOARD
1	1	1-23-0684	ASSY P/L

LIST OF MATERIALS

NEXT ASSY	QTY	MODEL
23-0225	1	1000A

APPLICATION

TOLERANCES
UNLESS OTHERWISE SPECIFIED
ALL DIMENSIONS APPLY AFTER FINISH
DECIMALS .xx ± .010 .xxx ± .005
ANGLES ± 1/2°
FRACTIONS ± 1/64
SURFACE ROUGHNESS 125
REMOVE ALL BURRS

DRAWN DATE
CHECKED DATE
APPROVED DATE

MATERIAL

FINISH

- IFR INC -
WICHITA, KANSAS

TITLE
HET AMP ÷ 2 PRESCALER
PC ASSY

SIZE C | PART NUMBER 3-23-0684

SCALE 2 x 1 | WEIGHT | SHEET 1 OF 1

Figure 6-54

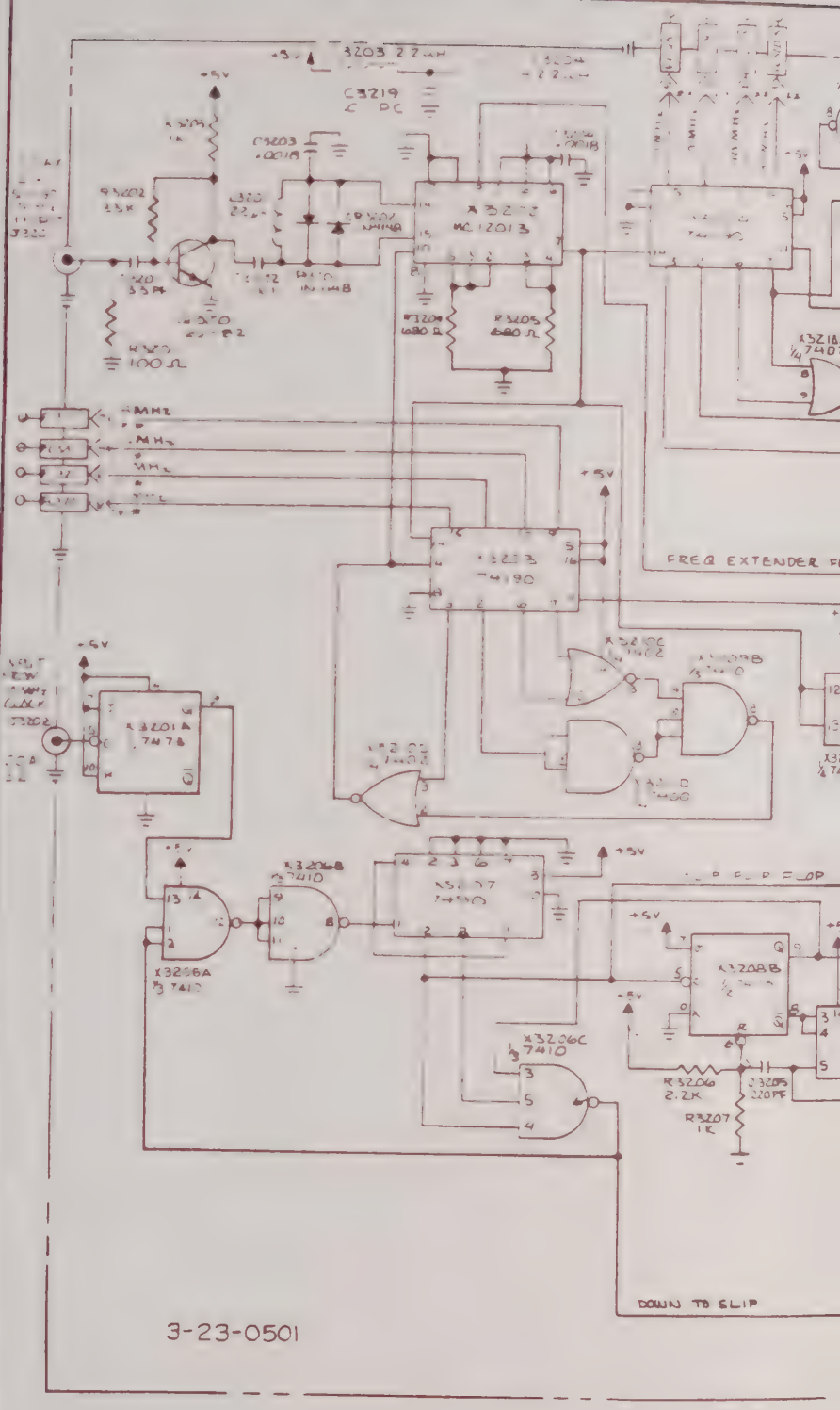

NOTE:

1. COMPONENTS MARKED *
2. CONNECTIONS MARKED** REFE
   FEED-THRU FILTERS APPEAR
3. Q3209 (2N3294) WAS 2N5462
   WAS 4.8K ON UNITS PRIOR

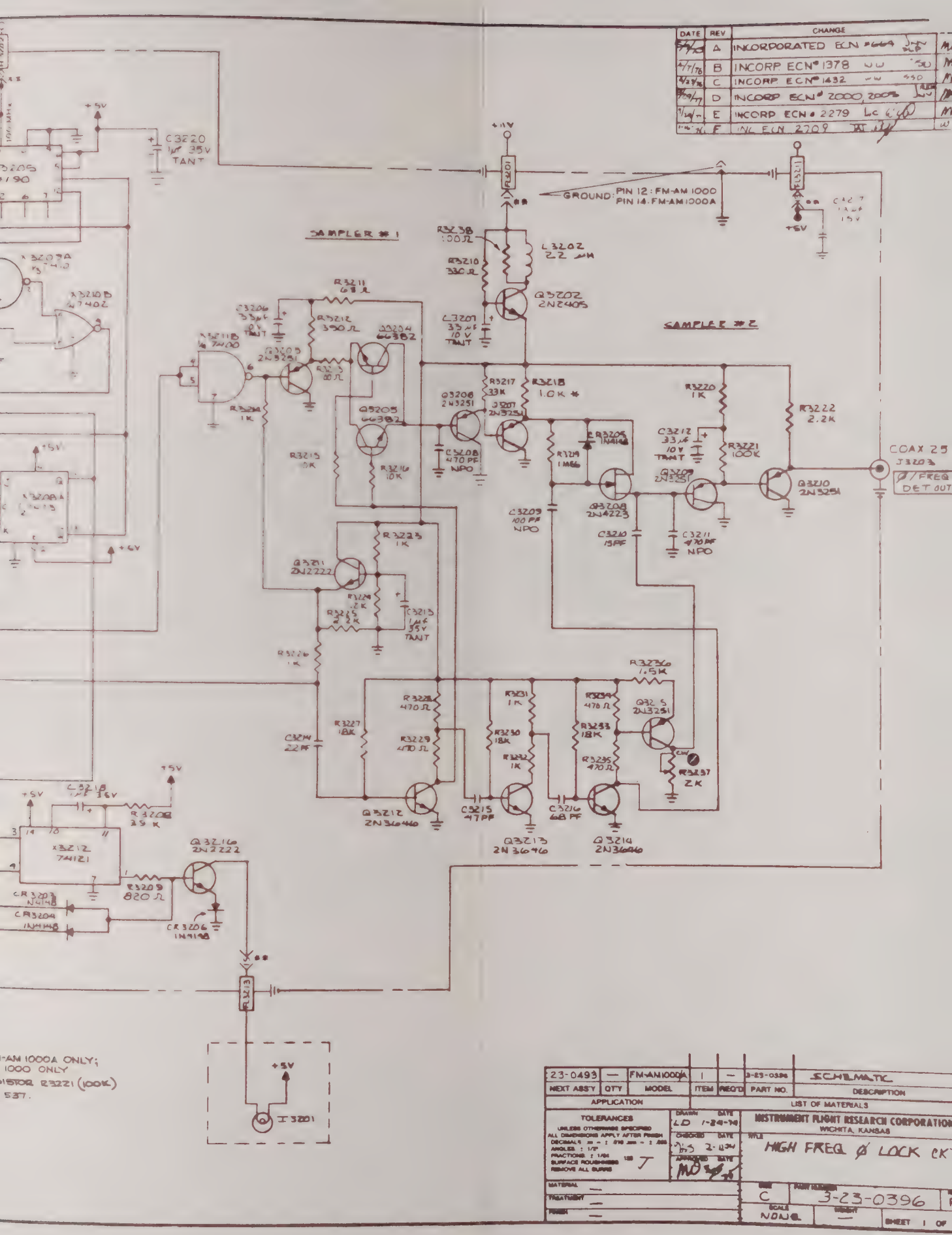

DATE
REV
CHANGE
A
INCORPORATED ECN #664
B
INCORP. ECN# 1378
C
INCORP. ECN# 1432
D
INCORP. ECN# 2000, 2005
E
INCORP. ECN # 2279
F
INC. ECN 2709
GROUND: PIN 12: FM-AM 1000
PIN 14: FM-AM 1000A
SAMPLER #1
SAMPLER #2
COAX 25
J3203
Ø/FREQ
DET OUT
+11V
+5V
+6V
C3220
1µF 35V
TANT
R3238
100Ω
L3202
22 µH
R3210
330Ω
Q3202
2N2405
L3207
33µF
10V
TANT
R3211
68Ω
R3212
390Ω
Q3204
66382
Q3205
66382
Q3208
2N3251
Q3207
2N3251
R3217
33K
R3218
1.0K
C3208
470 PF
NPO
R3220
1K
R3222
2.2K
C3212
33µF
10V
TANT
R3221
100K
Q3209
2N3251
Q3210
2N3251
Q3208
2N4223
C3209
100 PF
NPO
C3210
15PF
C3211
470 PF
NPO
R3223
1K
Q3211
2N2222
R3224
2K
R3225
2.2K
C3213
1µF
35V
TANT
R3226
1K
R3236
1.5K
R3228
470Ω
R3229
470Ω
R3227
18K
C3214
22PF
R3231
1K
R3230
18K
R3232
1K
R3234
470Ω
R3233
18K
R3235
470Ω
Q3215
2N3251
R3237
2K
Q3212
2N3646
C3215
47PF
Q3213
2N3646
C3216
68PF
Q3214
2N3646
C3218
1µF 35V
R3208
39K
X3212
74121
Q3216
2N2222
R3209
820Ω
CR3203
1N4148
CR3204
1N4148
CR3206
1N4148
R3213
J3201
-AM 1000A ONLY;
1000 ONLY
ISTOR R3221 (100K)
537.
23-0493
FM-AM1000A
1
3-23-0396
SCHEMATIC
NEXT ASSY
QTY
MODEL
ITEM
REQ'D
PART NO.
DESCRIPTION
APPLICATION
LIST OF MATERIALS
TOLERANCES
UNLESS OTHERWISE SPECIFIED
ALL DIMENSIONS APPLY AFTER FINISH
DECIMALS
ANGLES
FRACTIONS
SURFACE ROUGHNESS
REMOVE ALL BURRS
DRAWN
LD
1-24-74
CHECKED
2-4-74
APPROVED
MATERIAL
TREATMENT
FINISH
INSTRUMENT FLIGHT RESEARCH CORPORATION
WICHITA, KANSAS
HIGH FREQ Ø LOCK CK
C
3-23-0396
SCALE
NONE
SHEET 1 OF

Figure 6-

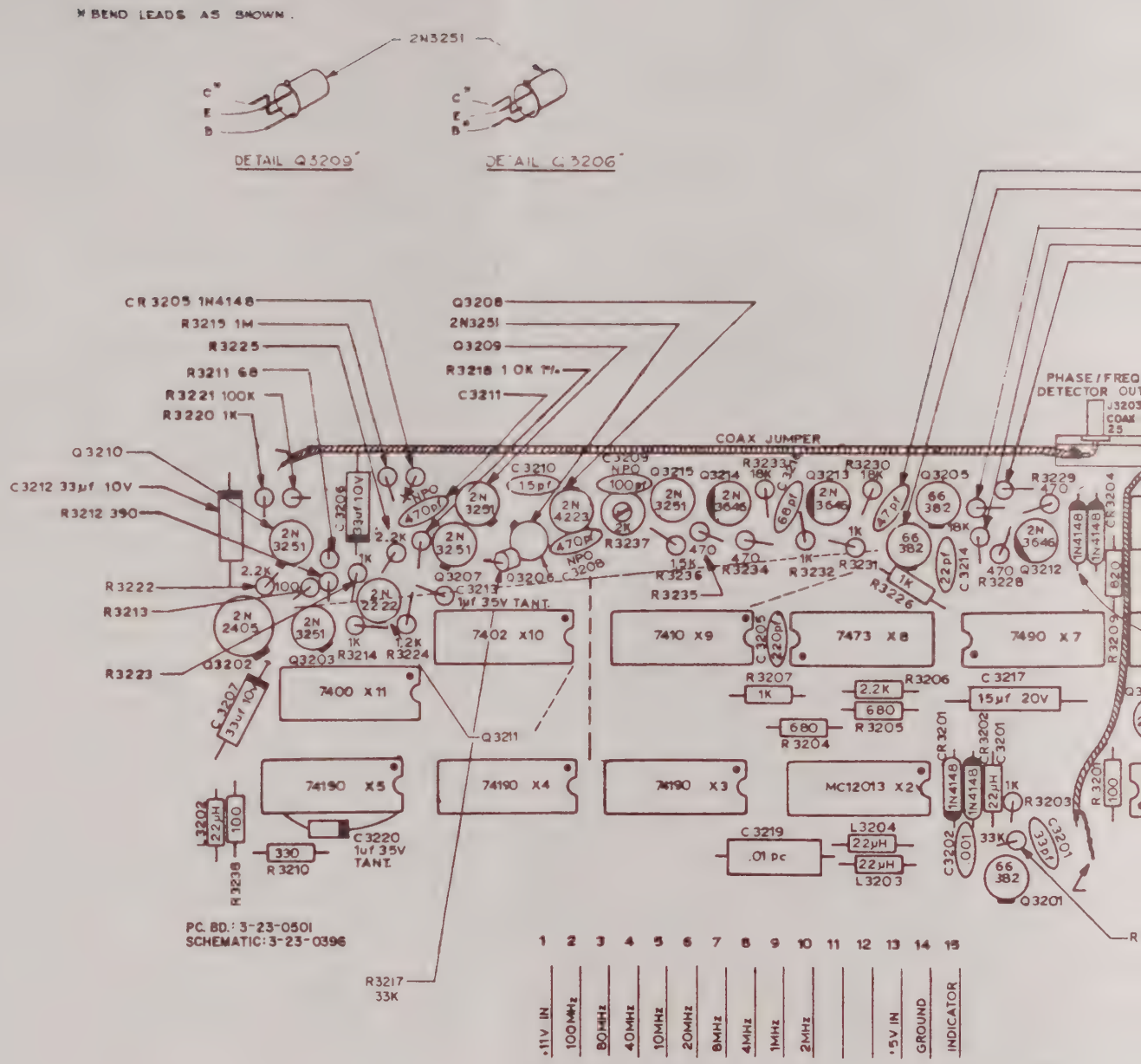

NOTES:

1. ALL RESISTORS ARE 1/4 W., 10% TOLERANCE EXCEPT AS NOTED.
2. ALL CAPACITOR VALUES ARE IN µF EXCEPT AS NOTED.
3. COMPONENT LEADS MAY EXTEND .04 TO .06 BEYOND BOTTOM OF BOARD AFTER SOLDERING.
4. MAXIMUM HEIGHT OF COMPONENTS TO BE .35 FROM COMPONENT SIDE OF BOARD.

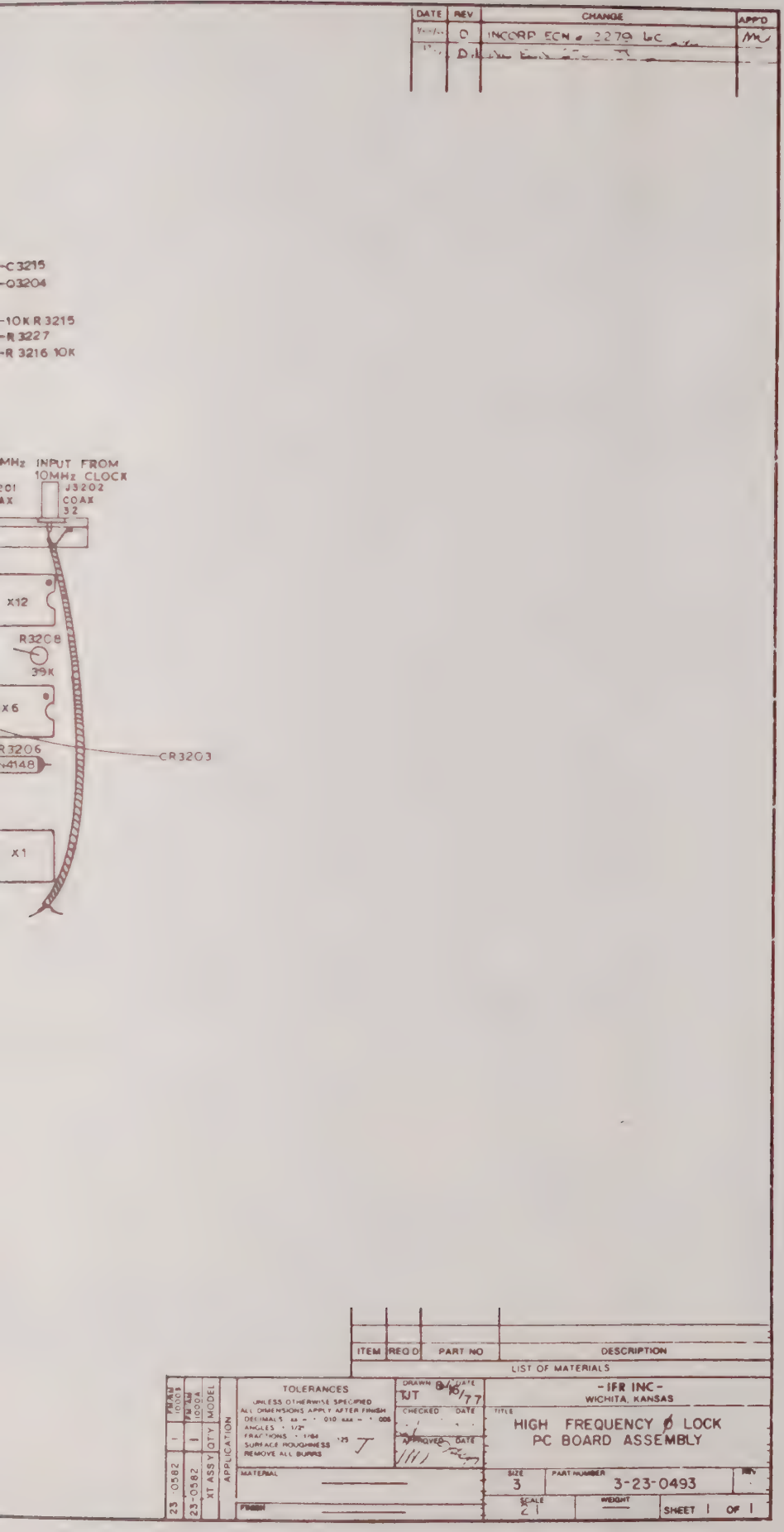
DATE
REV
CHANGE
APP'D
D
INCORP ECN # 2279 LC
-C3215
-03204
-10K R 3215
-R 3227
-R 3216 10K
MHz INPUT FROM
10MHz CLOCK
J3202
COAX
32
X12
R3208
39K
X6
R3206
CR3203
X1
ITEM
REQ'D
PART NO
DESCRIPTION
LIST OF MATERIALS
TOLERANCES
UNLESS OTHERWISE SPECIFIED
ALL DIMENSIONS APPLY AFTER FINISH
DECIMALS
ANGLES
FRACTIONS
SURFACE ROUGHNESS
REMOVE ALL BURRS
DRAWN
DATE
TJT
CHECKED
DATE
APPROVED
DATE
-IFR INC-
WICHITA, KANSAS
TITLE
HIGH FREQUENCY Ø LOCK
PC BOARD ASSEMBLY
MATERIAL
FINISH
SIZE
3
PART NUMBER
3-23-0493
SCALE
21
WEIGHT
SHEET 1 OF 1
23-0582
23-0582
XT ASSY
QTY
MODEL
APPLICATION

Figure 6-56

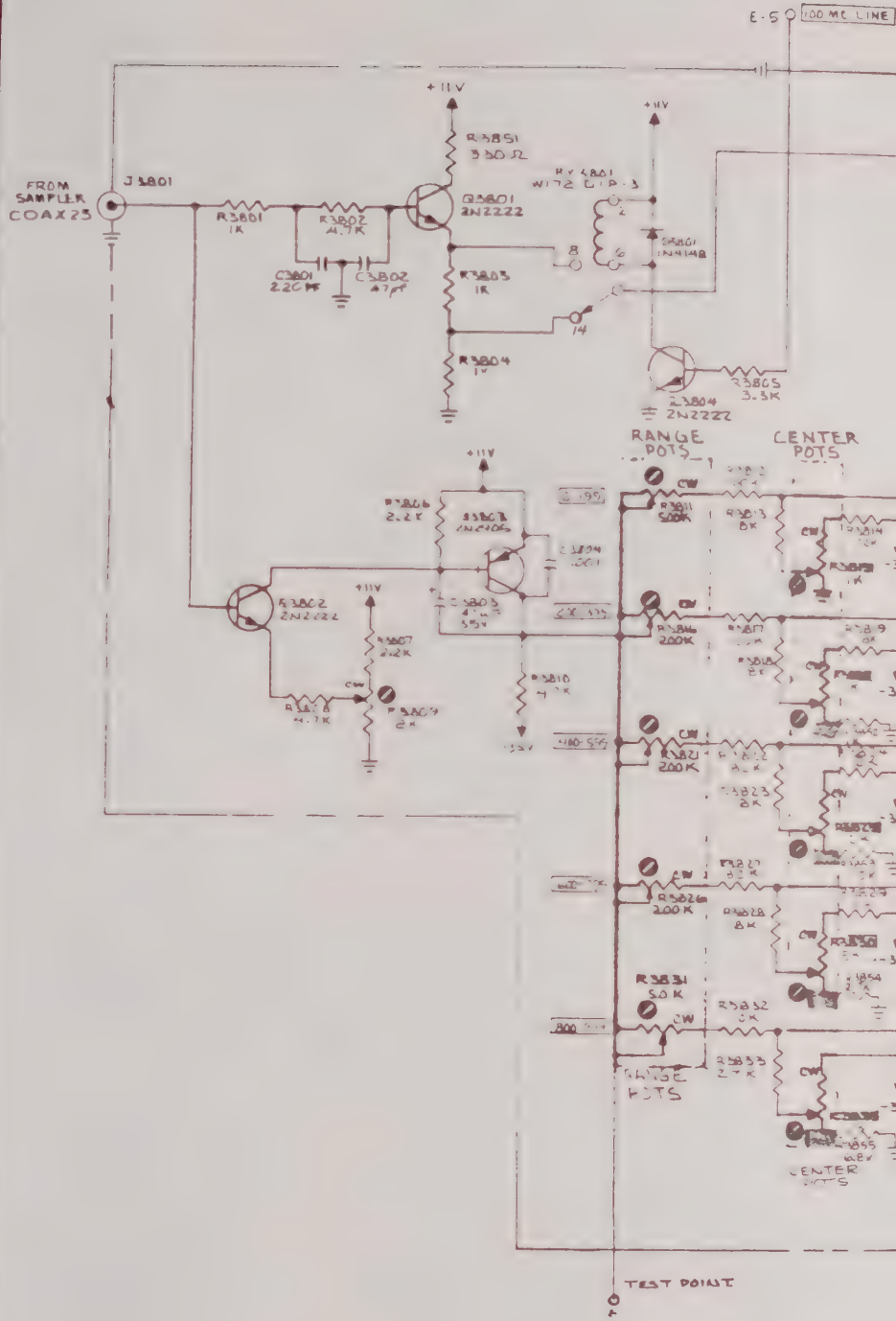
E-5
100 MC LINE
+11V
R3851
330 Ω
FROM SAMPLER COAX25
J3801
R3801
1K
R3802
4.7K
Q3801
2N2222
C3801
220 PF
C3802
47 pF
R3803
1K
R3804
1K
RY3801
W172 DIP-3
8
14
R3805
3.3K
Q3804
2N2222
RANGE POTS
CENTER POTS
R3806
2.2K
R3802
2N2222
R3807
2.2K
R3809
2K
R3810
R3811
500K
R3813
8K
R3816
200K
R3817
R3818
8K
R3821
200K
R3823
8K
R3826
200K
R3828
8K
R3831
50K
R3832
R3833
2.7K
CW
TEST POINT

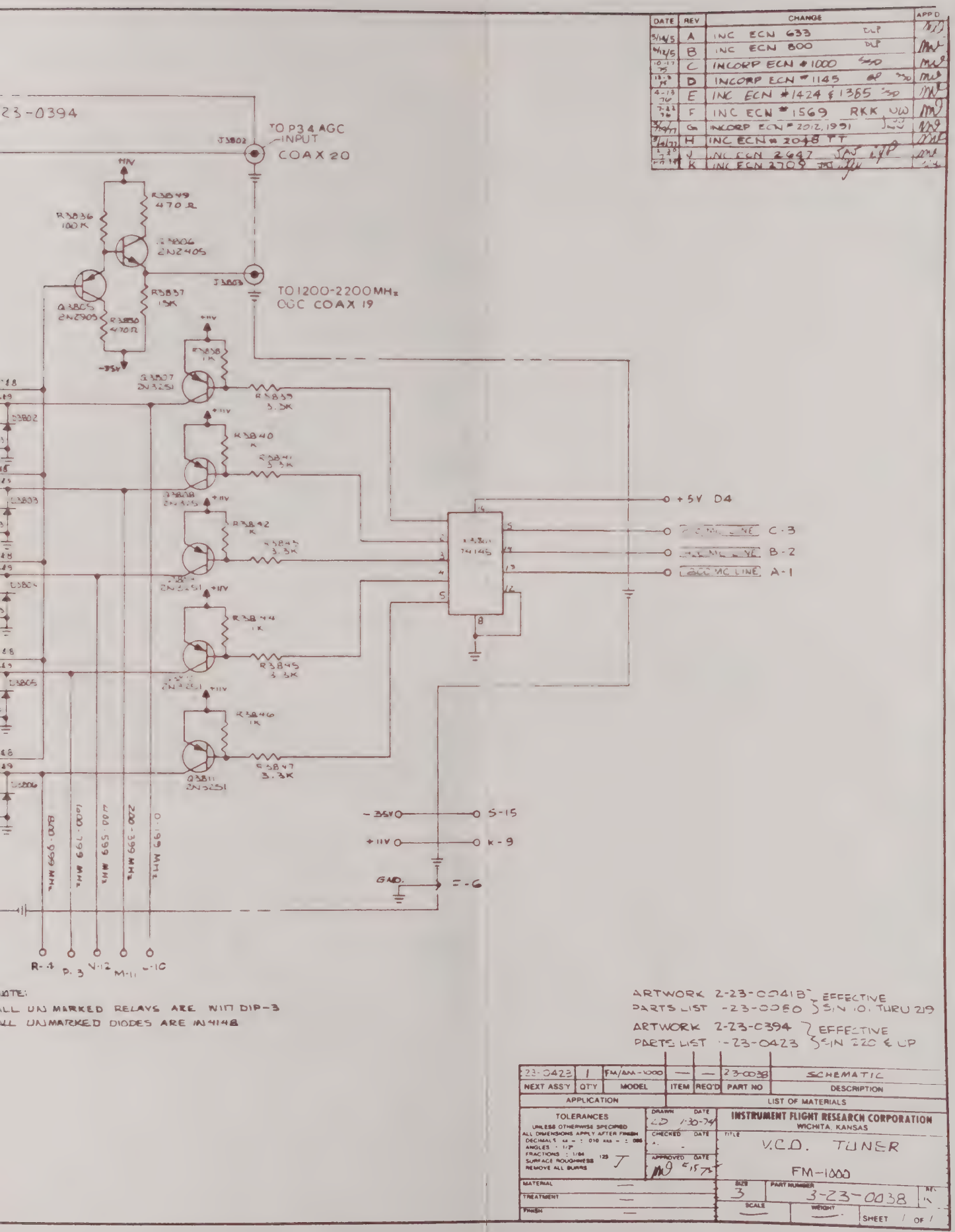

DATE	REV	CHANGE	APP'D
5/14/5	A	INC ECN 633 DLP	
6/12/5	B	INC ECN 800 DLP	
10-17-75	C	INCORP ECN #1000 SSD	
12-3-75	D	INCORP ECN #1145	
4-13-76	E	INC ECN #1424 & 1385 SSD	
7-22-76	F	INC ECN #1569 RKK UW	
7/29/77	G	INCORP ECN #2012, 1991	
9/16/77	H	INC ECN #2048 TT	
2-20-78	J	INC ECN 2647 JAJ	
7-7-78	K	INC ECN 2709 JAJ	

NOTE:
ALL UNMARKED RELAYS ARE W117 DIP-3
ALL UNMARKED DIODES ARE IN4148

ARTWORK 2-23-0041B } EFFECTIVE
PARTS LIST -23-0050 } S/N 101 THRU 219
ARTWORK 2-23-0394 } EFFECTIVE
PARTS LIST -23-0423 } S/N 220 & UP

NEXT ASS'Y	QTY	MODEL	ITEM	REQ'D	PART NO	DESCRIPTION
23-0423	1	FM/AM-1000	—	—	23-0038	SCHEMATIC

APPLICATION — LIST OF MATERIALS

TOLERANCES
UNLESS OTHERWISE SPECIFIED
ALL DIMENSIONS APPLY AFTER FINISH
DECIMALS .xx = ± .010 .xxx = ± .005
ANGLES ± 1/2°
FRACTIONS ± 1/64
SURFACE ROUGHNESS 125
REMOVE ALL BURRS

DRAWN LD DATE 1-30-74
CHECKED DATE
APPROVED DATE 5-15-75

INSTRUMENT FLIGHT RESEARCH CORPORATION
WICHITA, KANSAS

TITLE V.C.O. TUNER
FM-1000

MATERIAL —
TREATMENT —
FINISH —

SIZE 3 PART NUMBER 3-23-0038 REV K
SCALE — WEIGHT — SHEET 1 OF 1

Figure 6-57

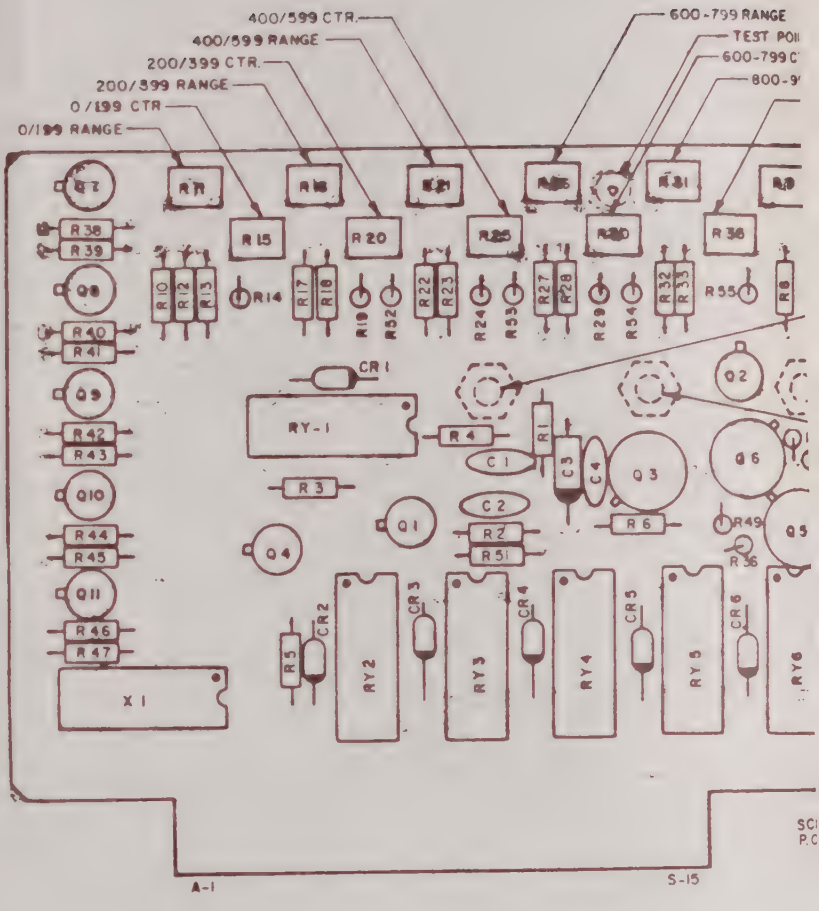
400/599 CTR.
400/599 RANGE
200/399 CTR.
200/399 RANGE
0/199 CTR
0/199 RANGE
600-799 RANGE
TEST POI
600-799 C
800-9
R38
R39
Q8
R40
R41
Q9
R42
R43
Q10
R44
R45
Q11
R46
R47
X1
R10
R12
R13
R14
R15
R17
R18
R19
R20
R22
R23
R24
R25
R27
R28
R29
R31
R32
R33
R34
R35
R36
R55
CR1
RY-1
R4
C1
R1
C3
C4
Q3
Q6
R3
Q1
C2
R7
R51
Q4
R6
R49
R56
Q5
Q2
CR2
R5
RY2
CR3
RY3
CR4
RY4
CR5
RY5
CR6
RY6
A-1
S-15
9051-8-11
GROUND TERMINAL
2N 3251
1K
3.3K
500K
200K
200K
200K
50K
2K
5K
4.7K
100K
18K
22K
120K
82K
10K
1.5K
2.7K
27K
6.8K
W172-DIP-3
220pf
47µf 35V
.001
2N 2905
2N 2222
2N 2405
2.2K
470
100K
47pf
330
W117-DIP-3
74145

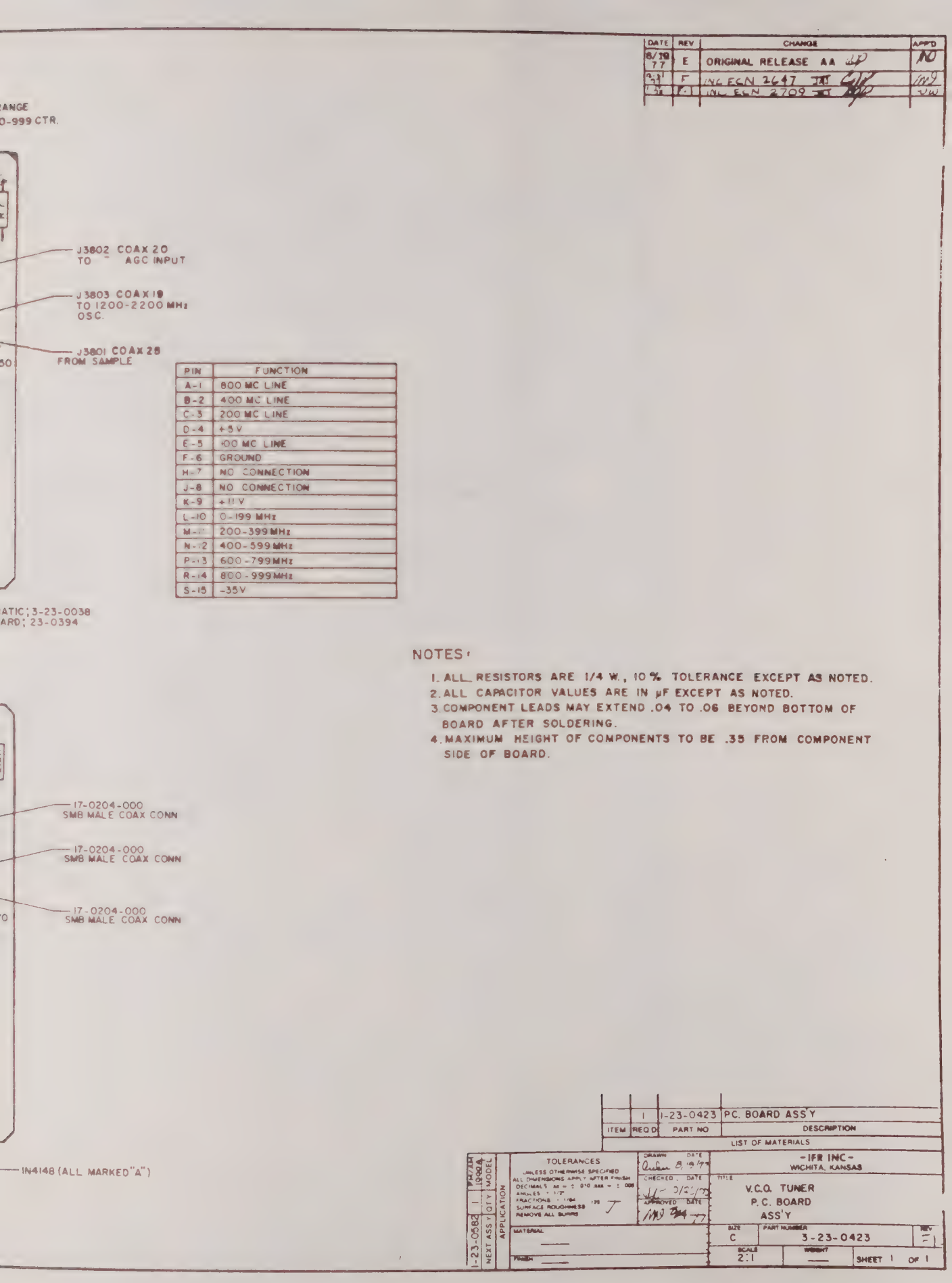
DATE
REV
CHANGE
APPD
8/19/77
E
ORIGINAL RELEASE AA
NO
F
INC ECN 2647
INC ECN 2709
RANGE
0-999 CTR.
J3802 COAX 20
TO AGC INPUT
J3803 COAX 19
TO 1200-2200 MHz
OSC.
J3801 COAX 28
FROM SAMPLE
PIN
FUNCTION
A-1
800 MC LINE
B-2
400 MC LINE
C-3
200 MC LINE
D-4
+5 V
E-5
100 MC LINE
F-6
GROUND
H-7
NO CONNECTION
J-8
NO CONNECTION
K-9
+11 V
L-10
0-199 MHz
M-11
200-399 MHz
N-12
400-599 MHz
P-13
600-799 MHz
R-14
800-999 MHz
S-15
-35V
ATIC; 3-23-0038
ARD; 23-0394
NOTES:
1. ALL RESISTORS ARE 1/4 W., 10% TOLERANCE EXCEPT AS NOTED.
2. ALL CAPACITOR VALUES ARE IN µF EXCEPT AS NOTED.
3. COMPONENT LEADS MAY EXTEND .04 TO .06 BEYOND BOTTOM OF BOARD AFTER SOLDERING.
4. MAXIMUM HEIGHT OF COMPONENTS TO BE .35 FROM COMPONENT SIDE OF BOARD.
17-0204-000
SMB MALE COAX CONN
17-0204-000
SMB MALE COAX CONN
17-0204-000
SMB MALE COAX CONN
IN4148 (ALL MARKED "A")
1
1-23-0423
P.C. BOARD ASS'Y
ITEM
REQD
PART NO
DESCRIPTION
LIST OF MATERIALS
TOLERANCES
UNLESS OTHERWISE SPECIFIED
ALL DIMENSIONS APPLY AFTER FINISH
DECIMALS .XX = ± .010 .XXX = ± .005
ANGLES ± 1/2°
FRACTIONS ± 1/64
SURFACE ROUGHNESS 125
REMOVE ALL BURRS
DRAWN
DATE 8/19/77
CHECKED
DATE
APPROVED
DATE
MATERIAL
Finish
-IFR INC-
WICHITA, KANSAS
TITLE
V.C.O. TUNER
P.C. BOARD
ASS'Y
SIZE
C
PART NUMBER
3-23-0423
REV
F
SCALE
2:1
WEIGHT
SHEET 1 OF 1
1-23-0582
1
1984
NEXT ASSY
QTY
MODEL
APPLICATION

Figure 6-58

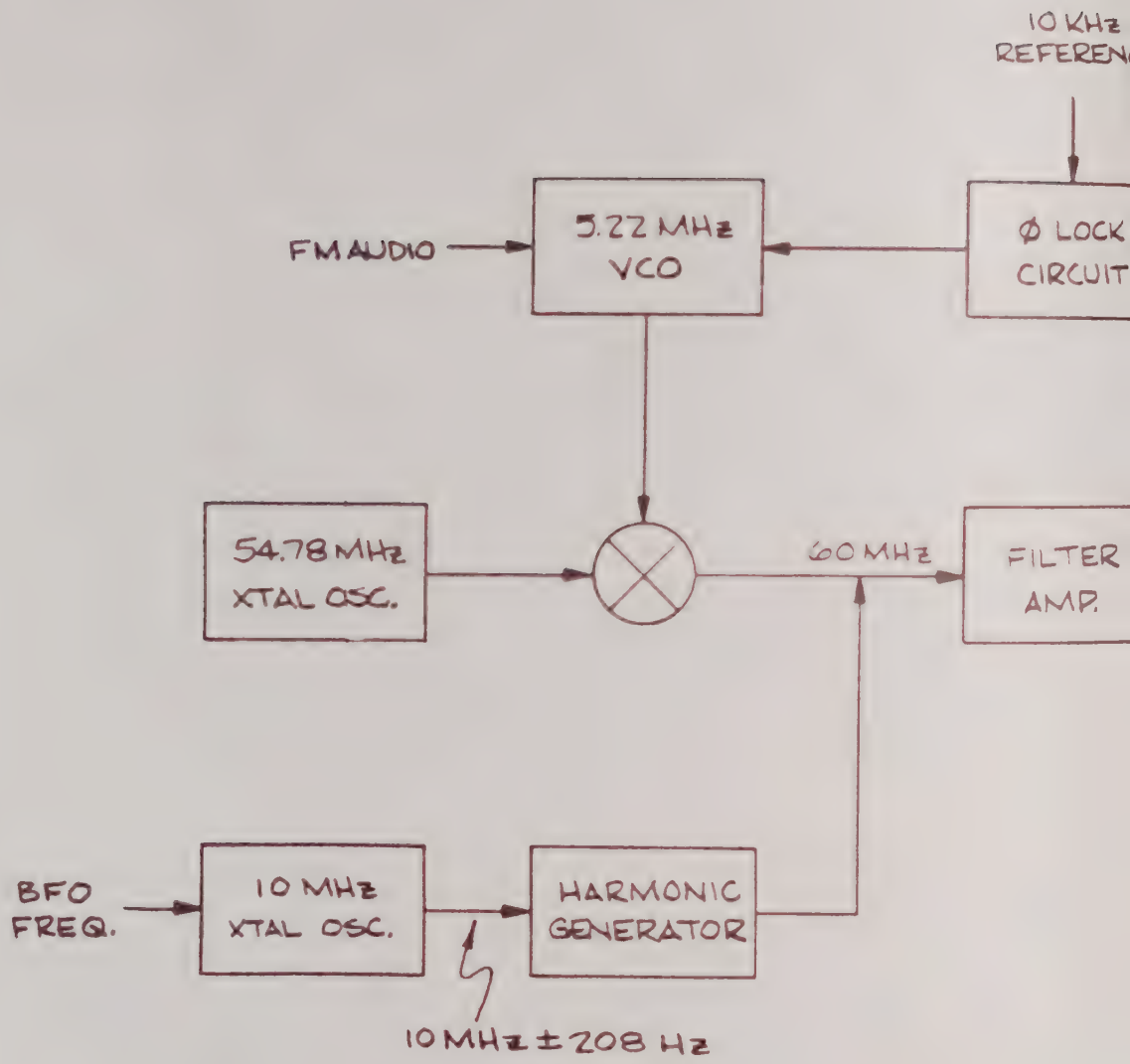
10 KHz
REFEREN
FM AUDIO
5.22 MHz
VCO
Ø LOCK
CIRCUIT
54.78 MHz
XTAL OSC.
60 MHz
FILTER
AMP.
BFO
FREQ.
10 MHz
XTAL OSC.
HARMONIC
GENERATOR
10 MHz ± 208 Hz

DATE	REV	CHANGE	APP'D

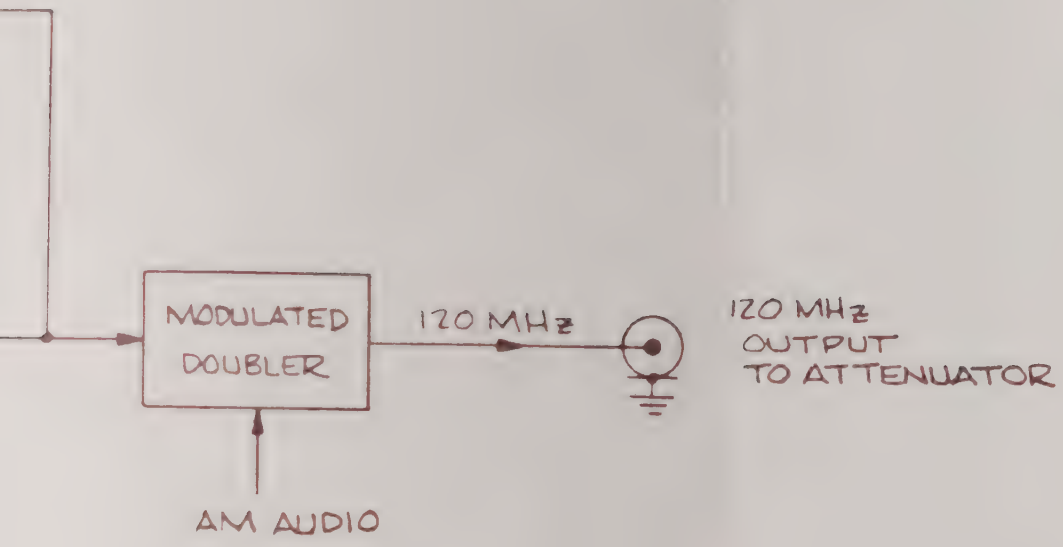

NEXT ASS'Y	QT'Y	MODEL	ITEM	REQ'D	PART NO.	DESCRIPTION
		FM/AM-1000				

APPLICATION | LIST OF MATERIALS

TOLERANCES
UNLESS OTHERWISE SPECIFIED
ALL DIMENSIONS APPLY AFTER FINISH
DECIMALS: ± .005
ANGLES: ± 1/2°
FRACTIONS: ± 1/64
SURFACE ROUGHNESS 125
REMOVE ALL BURRS

DRAWN DATE 5/14/75 d.parks
CHECKED DATE 5-14-75
APPROVED DATE

INSTRUMENT FLIGHT RESEARCH CORPORATION
WICHITA, KANSAS

TITLE
120 MHz FM/AM GENERATOR
BLOCK DIAGRAM

MATERIAL
TREATMENT
FINISH

SIZE B | PART NUMBER 2-23-0416 | REV
SCALE — | WEIGHT — | SHEET 1 OF 1

Figure 6-59

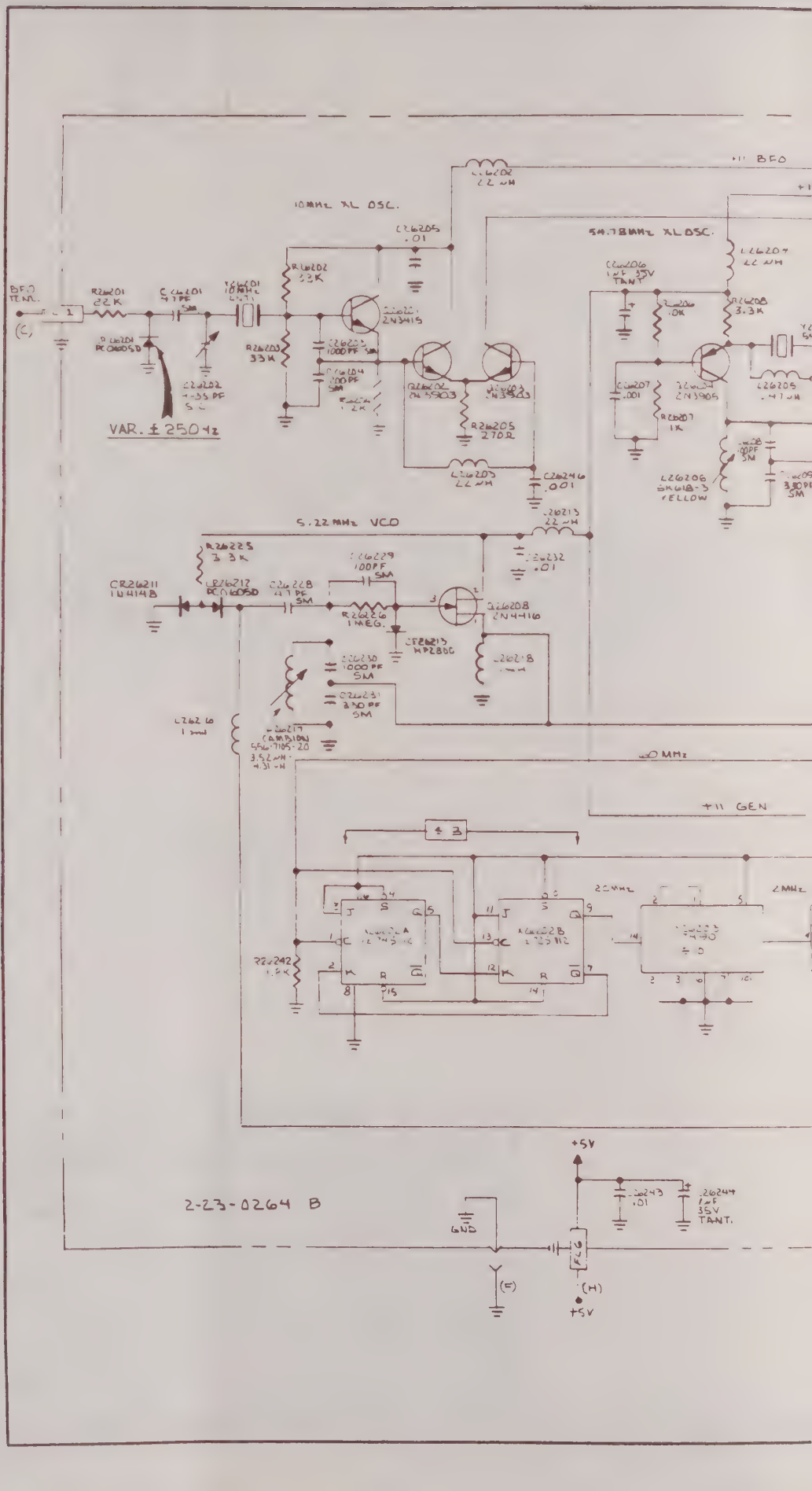

+11 BFO
10MHz XL OSC.
54.78MHz XL OSC.
BFO TEMP.
VAR. ± 250 Hz
5.22MHz VCO
60 MHz
+11 GEN
2-23-0264 B
GND
+5V

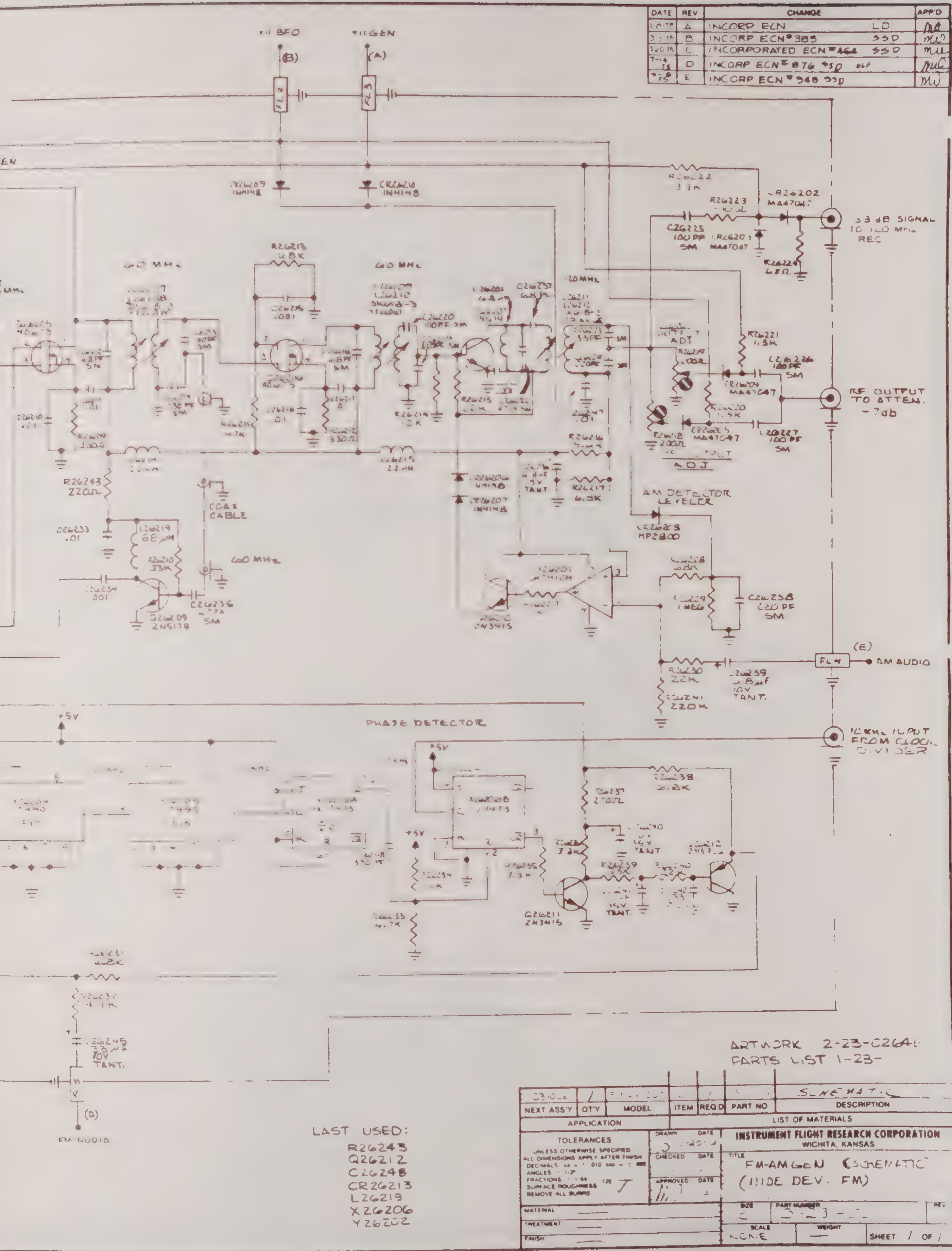

DATE
REV
CHANGE
APP'D
INCORP ECN
INCORP ECN # 385
INCORPORATED ECN # 464
INCORP ECN # 876
INCORP ECN # 948
+11 BFO
+11 GEN
(B)
(A)
CR26209 1N4148
CR26210 1N4148
R26222 3.3K
R26223
CR26202 MA47047
C26225 100 PF SM
CR26203 MA47047
R26224 68Ω
33 dB SIGNAL
REC
60 MHz
R26213 68K
C26216 .001
60 MHz
R26221 1.5K
C26226 100 PF SM
CR26204 MA47047
RF OUTPUT TO ATTEN. -7db
CR26205 MA47047
C26227 100 PF SM
R26218 200Ω
ADJ
R26216
R26217 6.3K
AM DETECTOR LEVELER
CR26208 HP2800
R26243 220Ω
COAX CABLE
C26233 .01
L26219 6E μH
R26210 33K
60 MHz
C26234 .001
C26236 SM
Q26209 2N5179
R26229 1 MEG
C26238 220 PF SM
(E)
FL4
AM AUDIO
R26230 22K
C26239 10V TANT.
R26241 220K
+5V
PHASE DETECTOR
+5V
R26238 6.8K
R26237 270Ω
+5V
R26235 3.3K
Q26211 2N3415
R26233 4.7K
TANT.
C26245 10V TANT.
(D)
FM AUDIO
ARTWORK 2-23-C264
PARTS LIST 1-23-
LAST USED:
R26243
Q26212
C26248
CR26213
L26219
X26206
Y26202
NEXT ASS'Y
QTY
MODEL
ITEM
REQ'D
PART NO
DESCRIPTION
APPLICATION
LIST OF MATERIALS
TOLERANCES
UNLESS OTHERWISE SPECIFIED
ALL DIMENSIONS APPLY AFTER FINISH
DECIMALS
ANGLES
FRACTIONS
SURFACE ROUGHNESS
REMOVE ALL BURRS
DRAWN
DATE
CHECKED
DATE
APPROVED
DATE
INSTRUMENT FLIGHT RESEARCH CORPORATION
WICHITA, KANSAS
TITLE
FM-AMGEN (SCHEMATIC
(WIDE DEV. FM)
MATERIAL
TREATMENT
FINISH
SIZE
PART NUMBER
REV
SCALE
NONE
WEIGHT
SHEET 1 OF 1

Figure 6-60

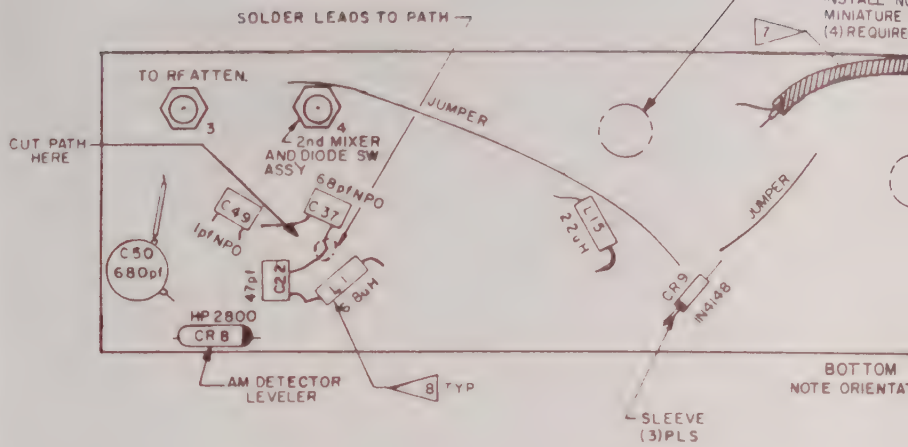

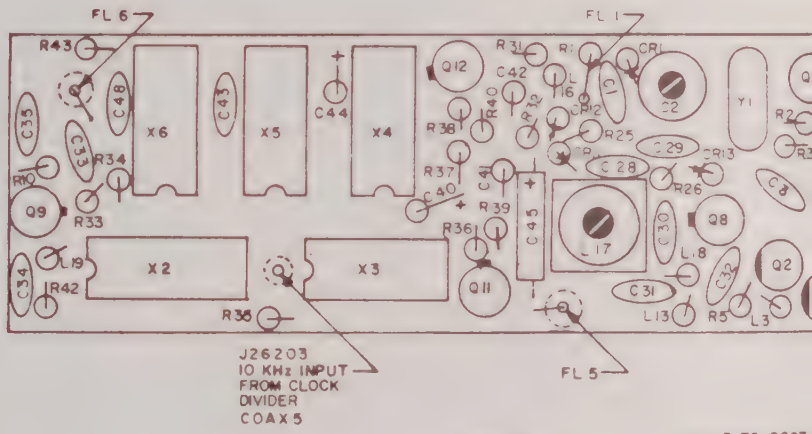

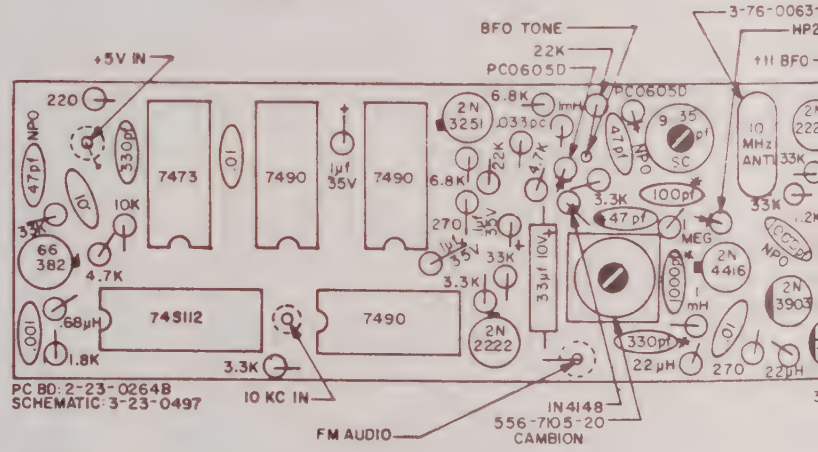

NOTES:

1. ALL RESISTORS ARE 1/4 W., 10 % TOLERANCE EXCEPT AS NOTED.
2. ALL CAPACITOR VALUES ARE IN µF EXCEPT AS NOTED, AND ARE "NPO" TYPE.
3. COMPONENT LEADS MAY EXTEND .04 TO .06 BEYOND BOTTOM OF BOARD AFTER SOLDERING.
4. MAXIMUM HEIGHT OF COMPONENTS TO BE .84 FROM COMPONENT SIDE OF BOARD.

5. ASTERISK (*), DENOTES "NPO" TYPE CAPACITORS.
6. ALL COMPONENT DESIGNATORS HAVE 262 PREFIX; i.e. R26201, Q26201, etc.

7. LOCATE RG-178 B/U FLEXIBLE COAX & APPLY "GE"/EQUIV. RTV IN LOCATION SHOWN TO SUITAB SECURE CABLE ALONG EDGE OF P.C. BOARD.
8. COMPONENTS ON BACK OF BD. SHOULD BE LAID FLAT AGAINST THE BD.

DATE	REV	CHANGE	APP
8-31-77	F	ORIGINAL RELEASE TJT	
	G	INC ECN#23621239212439 LC	
	H	REINCORP. ECN#2392 LC	
7	H-1	INC ECN 2709 JAJ	
7	J	INC ECN 2769 JAJ	
5-5-78	K	INC ECN 2954 & 2995 TenEyck	

0808-8
SOCKET
ON 40673 XSTRS)

COAX JUMPER

5 TO CLOCK÷

BD.

17-0204-000
"AEP"/EQUIV. SMB MALE CONN.
(3) PL

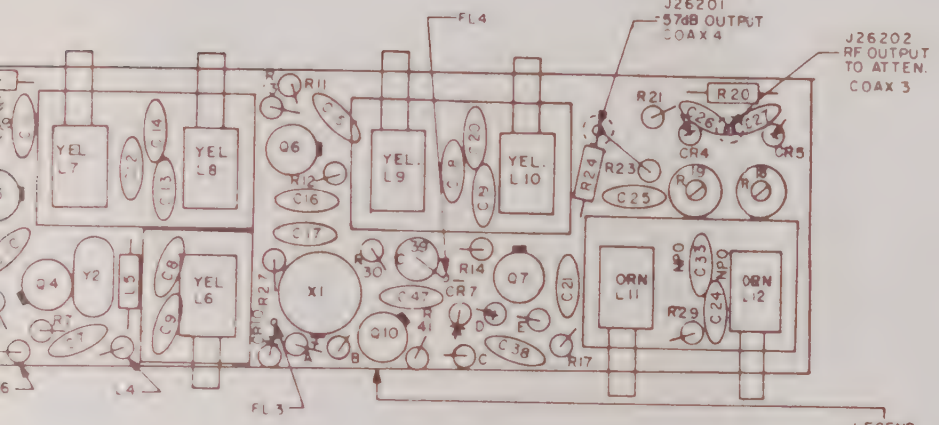

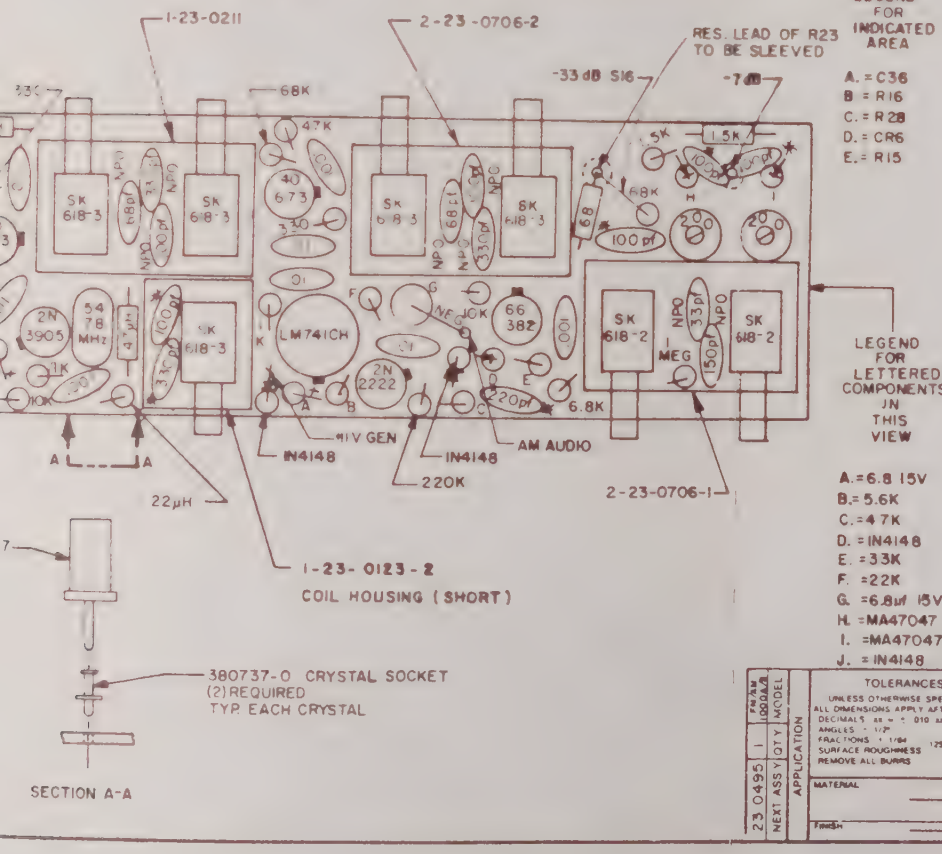

LEGEND FOR INDICATED AREA

A. = C36
B = R16
C. = R28
D. = CR6
E. = R15

LEGEND FOR LETTERED COMPONENTS IN THIS VIEW

A. = 6.8 15V
B. = 5.6K
C. = 47K
D. = IN4148
E. = 33K
F. = 22K
G. = 6.8µf 15V
H. = MA47047
I. = MA47047
J. = IN4148

ITEM	REQ'D	PART NO	DESCRIPTION

LIST OF MATERIALS

TOLERANCES
UNLESS OTHERWISE SPECIFIED
ALL DIMENSIONS APPLY AFTER FINISH
DECIMALS XX = ± .010 XXX = ± .005
ANGLES = 1/2°
FRACTIONS = 1/64
SURFACE ROUGHNESS 125
REMOVE ALL BURRS

DRAWN TEN EYCK 8/31/77
CHECKED DATE
APPROVED DATE

- IFR INC -
WICHITA KANSAS

TITLE
FM/AM GENERATOR
PC BOARD ASSEMBLY

MATERIAL
FINISH

SIZE C | PART NUMBER 3-23-0496 | REV K
SCALE 2:1 | WEIGHT | SHEET 1 OF 1

FSCM NO.	ITEM	QTY	MODEL
23-0495	NEXT ASSY	APPLICATION	

Figure 6-61

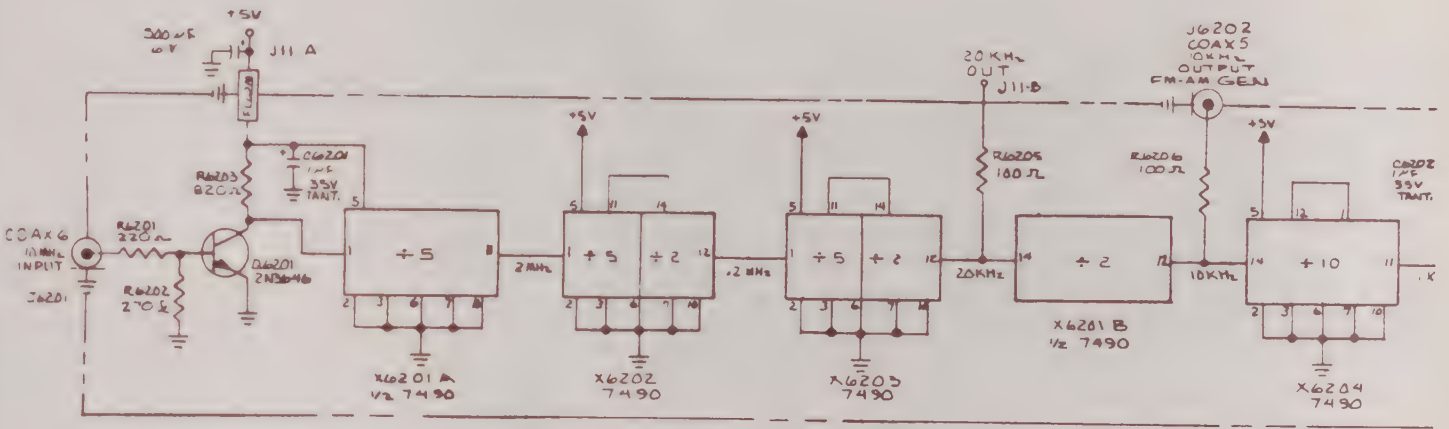
+5V
J11 A
R6203
820Ω
C6201
1μF
35V
TANT.
COAX6
10MHz
INPUT
J6201
R6201
220Ω
R6202
270Ω
Q6201
2N3646
÷5
X6201 A
1/2 7490
2MHz
÷5
÷2
X6202
7490
.2MHz
÷5
÷2
X6203
7490
20KHz
OUT
J11-B
R6205
100Ω
20KHz
÷2
X6201 B
1/2 7490
J6202
COAX5
10KHz
OUTPUT
FM-AM GEN
R6206
100Ω
10KHz
÷10
X6204
7490
C6202
1μF
35V
TANT.

DATE	REV	CHANGE	APP'D
	A	INC ECN #1 L.D.	
	B	INC ECN # 1205	
	C	INCORP ECN # 1467	
	D	INCORP ECN #	
	E	INCORP ECN # 2541 AA	
	G		

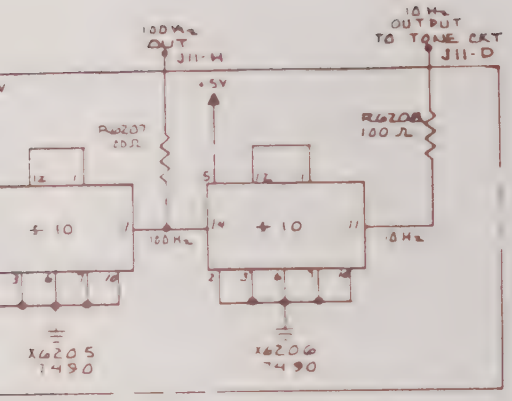

23-0093	1	FM-AM-1080	—	—	23-0062	SCHEMATIC
NEXT ASSY	QTY	MODEL	ITEM	REQ'D	PART NO	DESCRIPTION

APPLICATION — LIST OF MATERIALS

TOLERANCES
UNLESS OTHERWISE SPECIFIED
ALL DIMENSIONS APPLY AFTER FINISH
DECIMALS .XX = ± .010 .XXX = ± .005
ANGLES : 1/2°
FRACTIONS ± 1/64
SURFACE ROUGHNESS 125 J
REMOVE ALL BURRS

DRAWN 6 DATE 2-28-74
CHECKED DATE 2/28/74
APPROVED DATE 3/25

INSTRUMENT FLIGHT RESEARCH CORPORATION
WICHITA, KANSAS

TITLE: CLOCK DIVIDER

MATERIAL —
TREATMENT —
FINISH —

SIZE C | PART NUMBER 3-23-0062 | REV G
SCALE — | WEIGHT — | SHEET 1 OF 1

Figure 6-62

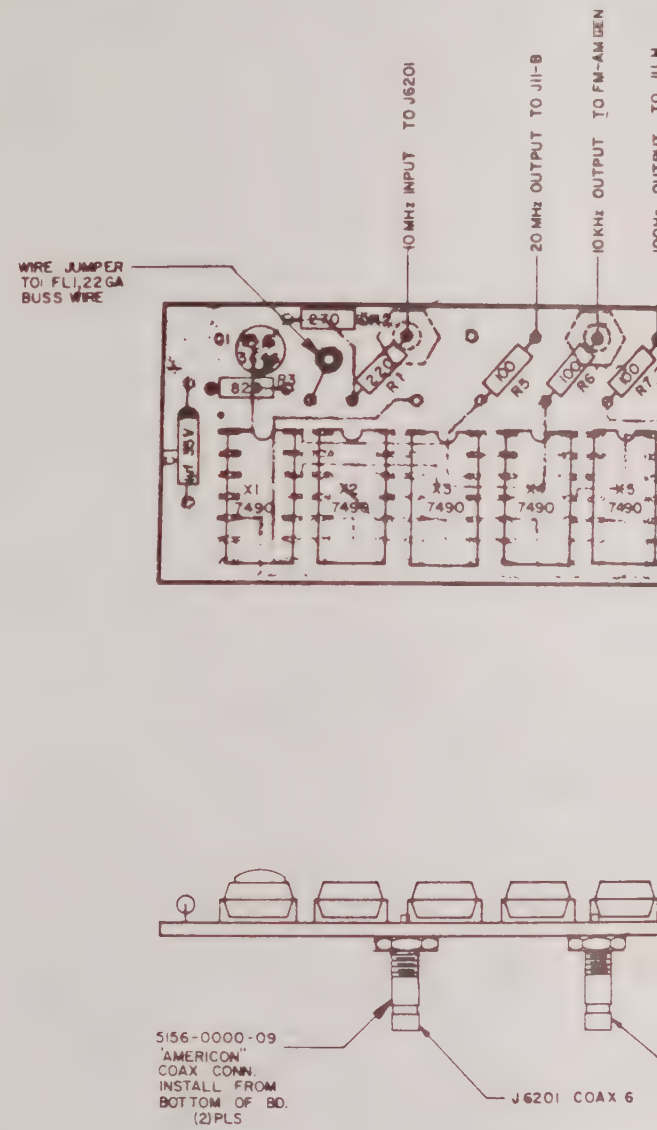

WIRE JUMPER TO: FL1, 22GA BUSS WIRE
10 MHz INPUT TO J6201
20 MHz OUTPUT TO J11-B
10 KHz OUTPUT TO FM-AM GEN
Q1
270
R2
220
R1
82
R3
100
R5
100
R6
100
R7
35V
X1 7490
X2 7490
X3 7490
X4 7490
X5 7490
5156-0000-09 "AMERICON" COAX CONN. INSTALL FROM BOTTOM OF BD. (2) PLS
J6201 COAX 6

DATE	REV	CHANGE	APP'D
10-21-77	G	ORIGINAL RELEASE T/T	
	G-1	INC ECN 2709	

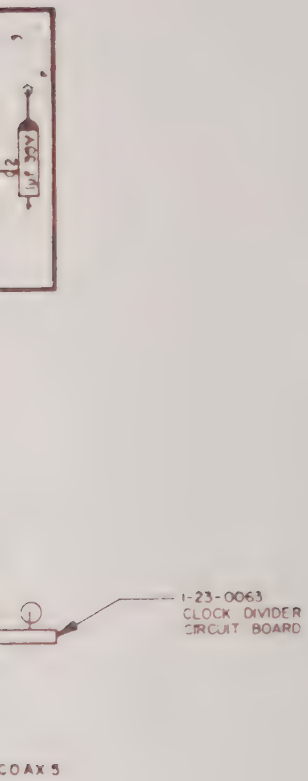

4. SCHEMATIC NO 3-23-0062
3. MAXIMUM HEIGHT OF COMPONENTS TO BE .03 FROM COMPONENT SIDE OF BOARD.
2. COMPONENT LEADS MAY EXTEND .04 TO .06 BEYOND BOTTOM OF BOARD AFTER SOLDERING.
1. ALL RES. ARE 1/4W, 10% TOL.

NOTES:

ITEM	REQ'D	PART NO.	DESCRIPTION

LIST OF MATERIALS

23-0217	1	FM/AM 1990A/B	
NEXT ASS'Y	QTY	MODEL	

APPLICATION

TOLERANCES
UNLESS OTHERWISE SPECIFIED
ALL DIMENSIONS APPLY AFTER FINISH
DECIMALS .xx = ± .010 .xxx = ± .005
ANGLES ± 1/2°
FRACTIONS ± 1/64
SURFACE ROUGHNESS 125
REMOVE ALL BURRS

DRAWN Ten Eyck DATE 10-21-77
CHECKED DATE
APPROVED DATE 11-77

MATERIAL
FINISH

- IFR INC -
WICHITA, KANSAS

TITLE
CLOCK DIVIDER
PC BOARD
ASSEMBLY

SIZE C | PART NUMBER 3-23-0093 | REV G-1
SCALE 2:1 | WEIGHT | SHEET 1 OF 1

Figure 6-63

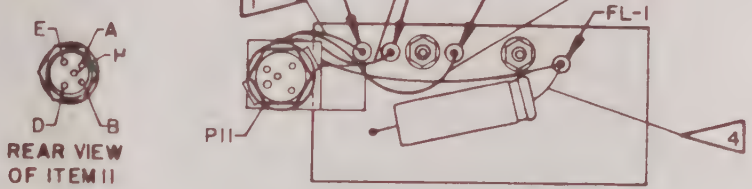

REAR VIEW OF ITEM 11 CONN.

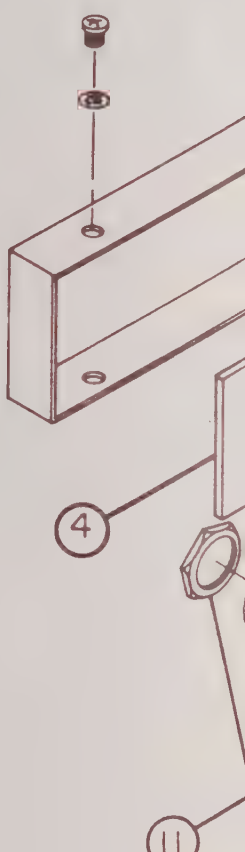

ITEM	FROM
1	TERM 1
2	TERM 2
3	FL-1
4	TERM 3

NOTES:

1. SOLDER POSITIVE LEAD OF ITEM 10 CAP. TO ITEM 3 FILTER AND SOLDER NEG. LEAD OF SAME CAP. TO ITEM 2 ENCLOSURE AS INDICATED.

DATE	REV	CHANGE	APP'D
10-27-77	E	ORIGNAL RELEASE	
	E-1	INC ECN 2688	WW
	G	INCORP. ECN-3020	WW

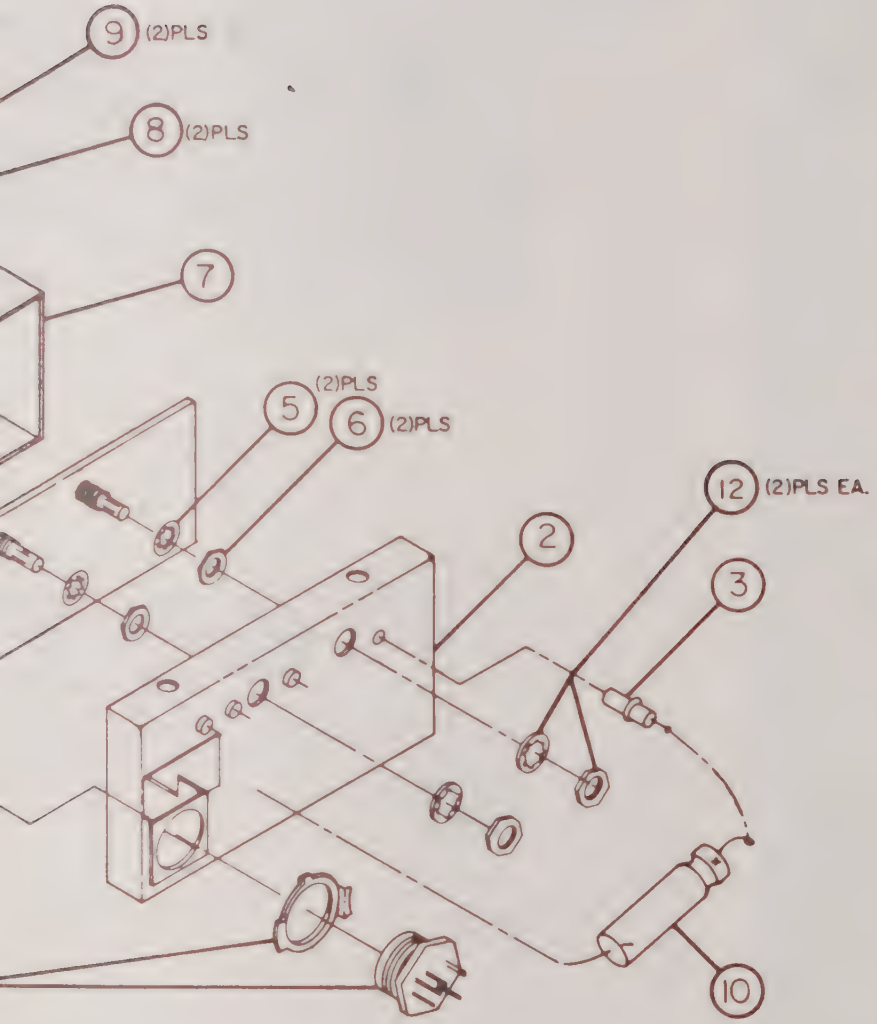

ITEM	REQ'D	PART NO.	DESCRIPTION
12	2	———	ITEM 12 HDW. PART OF ITEM 4 CONNECTORS
11	1	M5PLRN	"WINCHESTER"/EQUIV (5) PIN MALE CONN.
10	1	401-500-6	"TEMPLE"/EQUIV ELECT CAP. 500µf 6V
9	2	4-40x1/8	PBHMS
8	2	#4	INT TOOTH LOCKWASHER
7	1	2-23-086-2	CLOCK DIVIDER ENCLOSURE COVER
6	2	10-32	SMALL PATTERN HEX NUT
5	2	#10	INT TOOTH LOCKWASHER
4	1	3-23-0093	CLOCK DIVIDER PC BOARD ASSEMBLY
3	1	1203-050	ERIE/EQUIV FILTER
2	1	2-23-0116-1	CLOCK DIVIDER ENCLOSURE BASE
1	1	3-23-0217	CLOCK DIVIDER ASSEMBLY

LIST OF MATERIALS

EM 11 WIRING LIST

	COLOR	GA	LGTH	CODE	FUNCTION
O	BRN	26	1.5		10Hz OUTPUT
H	WHT/BLU	26	1.5		100Hz OUTPUT
A	ORN	26	3.0		+5V INPUT
B	GRN	26	2.5		20KHz OUTPUT

NEXT ASSY	QTY	MODEL
23-0216	1	FM/AM 1000
23-0644	1	FM/AM 1000

APPLICATION

TOLERANCES
UNLESS OTHERWISE SPECIFIED
ALL DIMENSIONS APPLY AFTER FINISH
DECIMALS .XX = ± .010 .XXX = ± .005
ANGLES ± 1/2°
FRACTIONS ± 1/64
SURFACE ROUGHNESS 125
REMOVE ALL BURRS

MATERIAL

FINISH

DRAWN TenEyck DATE 10-27-77
CHECKED DATE
APPROVED DATE

-IFR INC-
WICHITA, KANSAS

TITLE
CLOCK DIVIDER ASSEMBLY

SIZE C | PART NUMBER 3-23-0217 | REV G
SCALE 1:1 | WEIGHT ——— | SHEET 1 OF 1

Figure 6-64

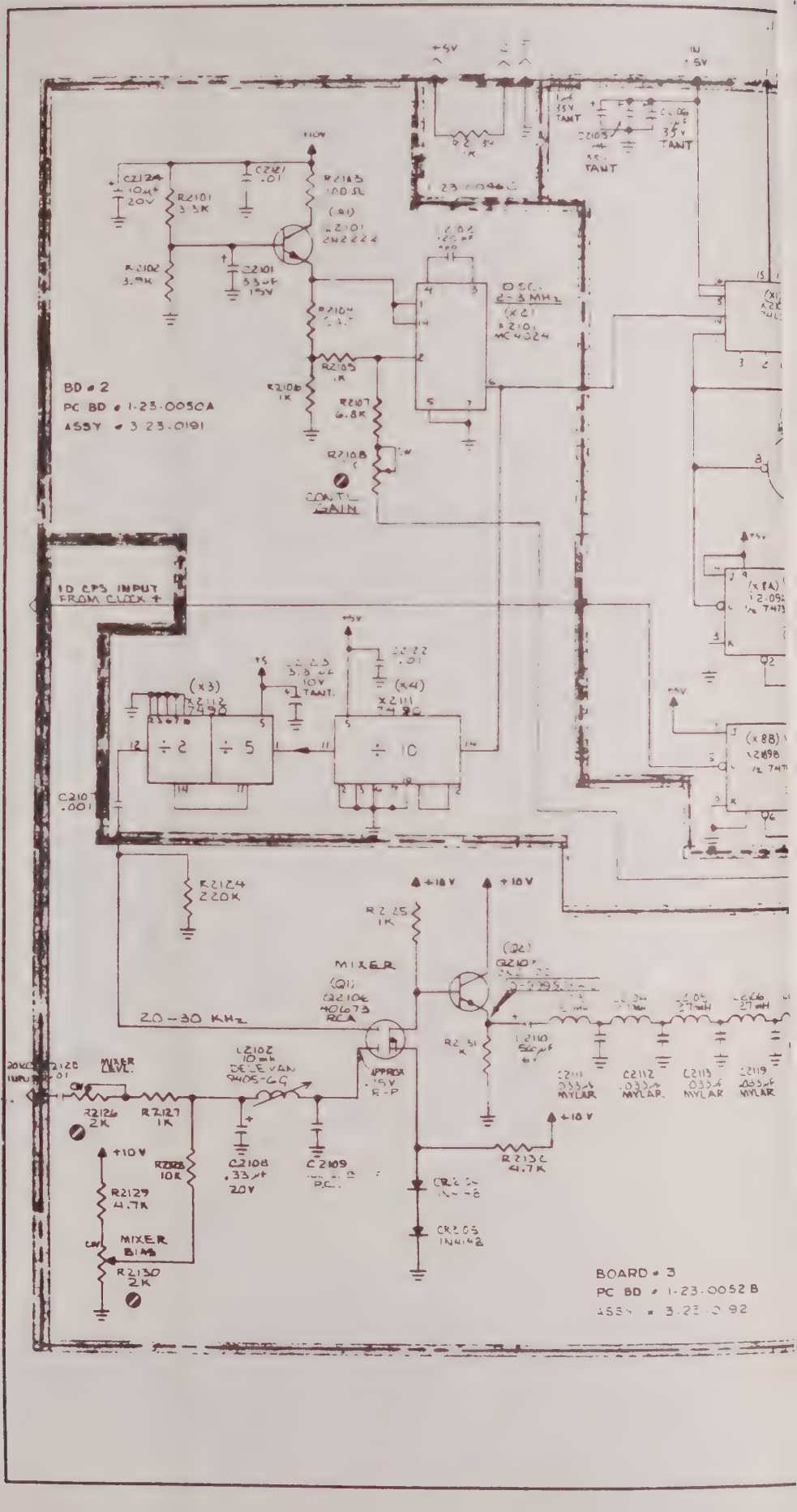
BD # 2
PC BD # 1-23-0050A
ASSY # 3 23-0191
10 CPS INPUT FROM CLOCK +
MIXER
20-30 KHz
MIXER LEVEL
MIXER BIAS
CONT'L GAIN
OSC. 2-3 MHz
BOARD # 3
PC BD # 1-23-0052 B

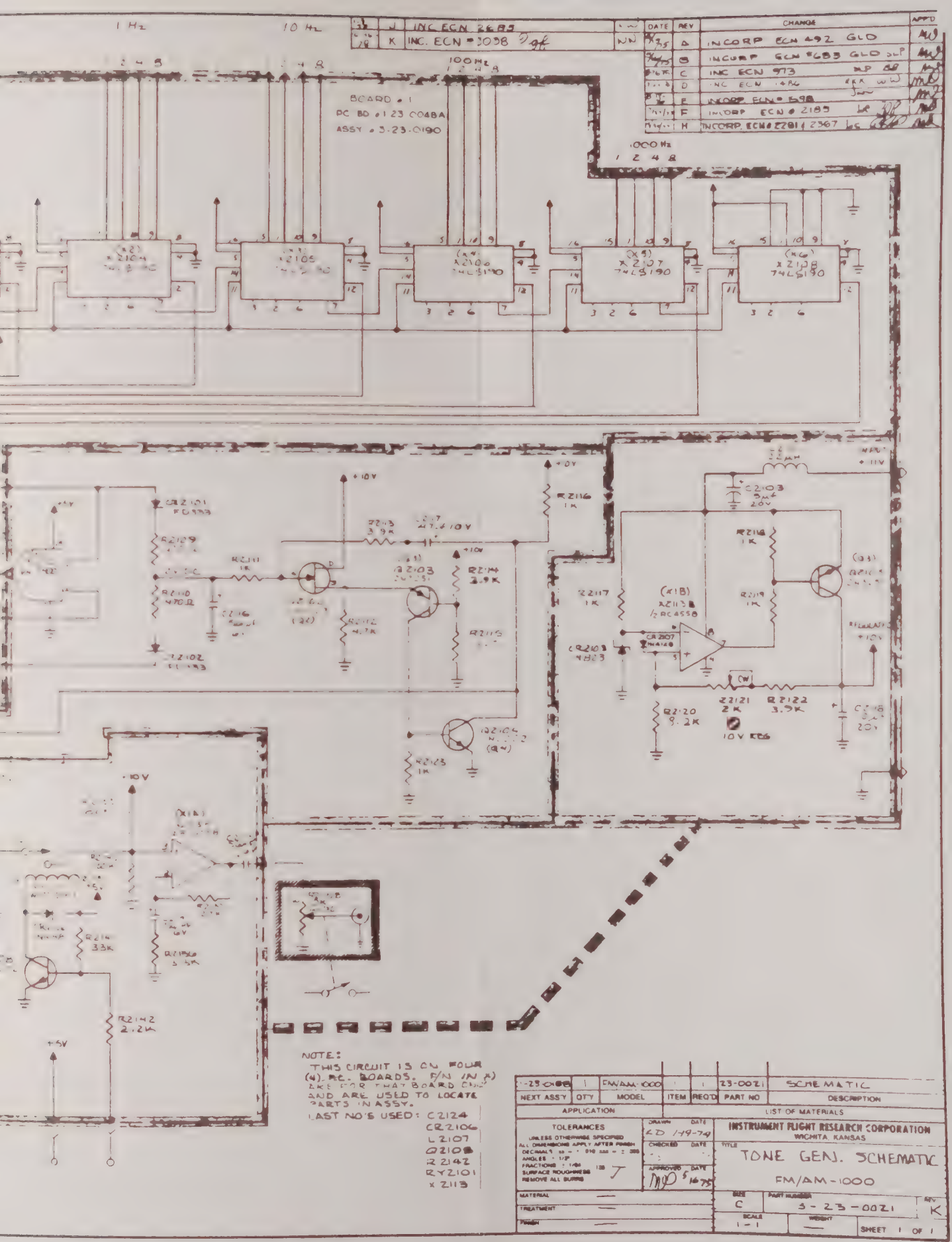

1 Hz
10 Hz
100 Hz
1000 Hz
BOARD # 1
PC BD # 1 23 0048A
ASSY # 3-23-0190
INC ECN 2685
INC. ECN # 3038
INCORP ECN 492 GLD
INCORP ECN # 683 GLD
INC ECN 973
INC ECN 1486
INCORP ECN # 598
INCORP ECN # 2185
INCORP. ECN # 2281 & 2367
NOTE:
THIS CIRCUIT IS ON FOUR (4) PC. BOARDS. P/N IN X) ARE FOR THAT BOARD ONLY AND ARE USED TO LOCATE PARTS IN ASSY.
LAST NO'S USED: C2124
CR2106
L2107
Q2108
R2142
RY2101
X2113
1-23-0188 | 1 | FM/AM-1000 | 1 | 1 | 23-0021 | SCHEMATIC
NEXT ASSY | QTY | MODEL | ITEM | REQ'D | PART NO | DESCRIPTION
APPLICATION
LIST OF MATERIALS
TOLERANCES
INSTRUMENT FLIGHT RESEARCH CORPORATION
WICHITA, KANSAS
TONE GEN. SCHEMATIC
FM/AM-1000
C
3-23-0021
K
1-1
SHEET 1 OF 1

Figure 6-65

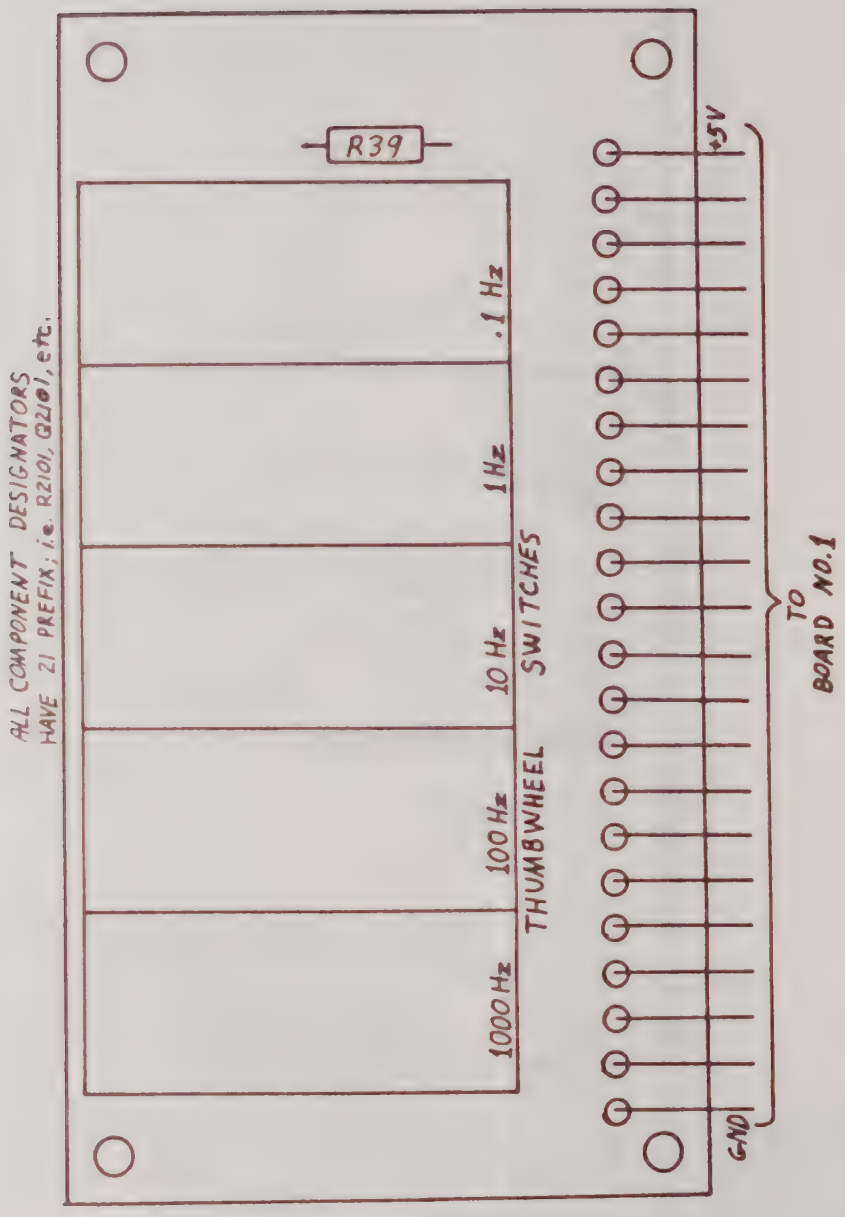

Modulation Frequency Switch
Mother Board Parts Layout
1-23-0046C

Figure 6-66

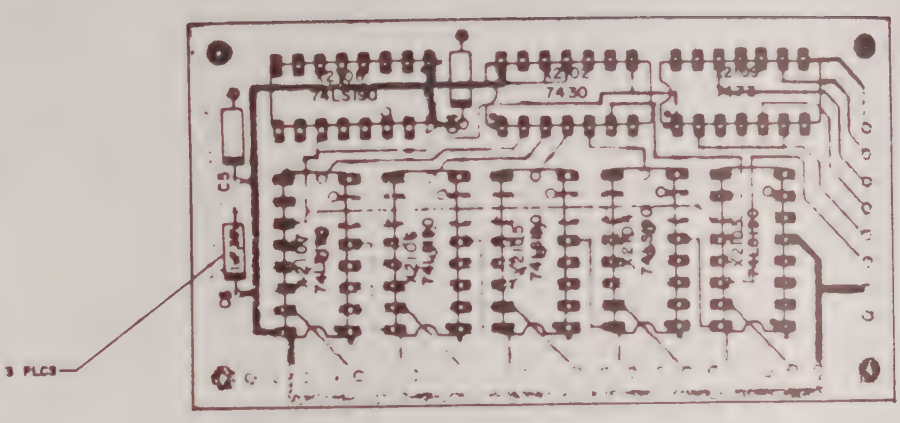

COMPONENT VIEW

REF DWG

PC BOARD 1-23-0048

SCHEMATIC 3-23-0021

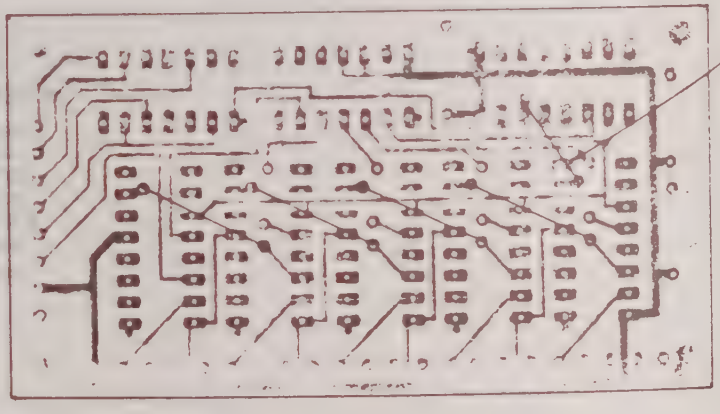

BOTTOM VIEW

DATE	REV	CHANGE	APP
9/16/77	D	NEW RELEASE	

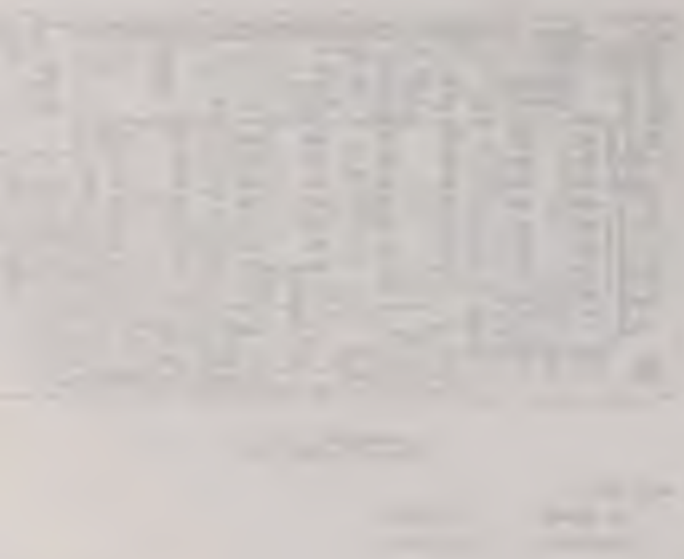

—#26 WIRE W/SLEEVING

NOTES:

1. ALL RESISTORS ARE 1/4 W., 10% TOLERANCE EXCEPT AS NOTED.
2. ALL CAPACITOR VALUES ARE IN μF EXCEPT AS NOTED.
3. COMPONENT LEADS MAY EXTEND .04 TO .06 BEYOND BOTTOM OF BOARD AFTER SOLDERING.
4. MAXIMUM HEIGHT OF COMPONENTS TO BE .19 FROM COMPONENT SIDE OF BOARD.

ITEM	REQ'D	PART NO	DESCRIPTION
3	1	1-23-0048	PC BOARD
2	REF	3-23-0021	SCHEMATIC
1	1	1-23-0190	ASSY

LIST OF MATERIALS

NEXT ASSY	QTY	MODEL
23-0188	1	

APPLICATION

TOLERANCES
UNLESS OTHERWISE SPECIFIED
ALL DIMENSIONS APPLY AFTER FINISH
DECIMALS .XX ± .010 .XXX ± .005
ANGLES ± 1/2°
FRACTIONS ± 1/64
SURFACE ROUGHNESS 125
REMOVE ALL BURRS

DRAWN DATE 8-18-77
CHECKED DATE
APPROVED DATE

MATERIAL
FINISH

- IFR INC -
WICHITA KANSAS

TITLE
TONE GENERATOR ASSY
BOARD NO. 1

SIZE C
PART NUMBER 3-23-0190
REV D
SCALE 2X1
WEIGHT
SHEET 1 OF 1

Figure 6-67

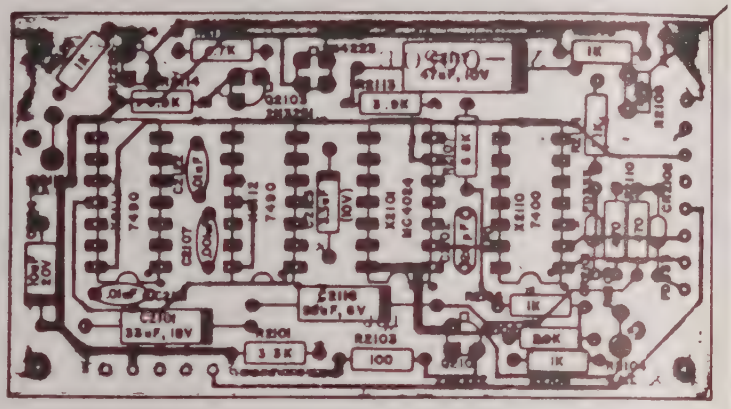

COMPONENT SIDE

REF DWG:

PC BOARD 1-23-0050

SCHEMATIC 3-23-0021

DATE	REV	CHANGE	APP'D
8/16/77	D	NEW RELEASE	MD
[illegible]	E	INCORP. ECN# 2281 & 2367	[illegible]
[illegible]	F	INC. ECN# 3038	WW

CONTROL GAIN (20K)

NOTES:

1. ALL RESISTORS ARE 1/4 W., 10% TOLERANCE EXCEPT AS NOTED.
2. ALL CAPACITOR VALUES ARE IN µF EXCEPT AS NOTED.
3. COMPONENT LEADS MAY EXTEND .04 TO .06 BEYOND BOTTOM OF BOARD AFTER SOLDERING.
4. MAXIMUM HEIGHT OF COMPONENTS TO BE .35 FROM COMPONENT SIDE OF BOARD.
5. UNLESS OTHERWISE SPECIFIED:
   ALL TRANSISTORS ARE 2N2222
   ALL DIODES ARE FD333

ITEM	REQ'D	PART NO	DESCRIPTION
3	1	1-23-0050	PC BOARD
2	REF	3-23-0021	SCHEMATIC
1	1	1-23-0191	ASSY

LIST OF MATERIALS

NEXT ASSY	QTY	MODEL
23-0188	1	FM/AM 1000

APPLICATION

TOLERANCES
UNLESS OTHERWISE SPECIFIED
ALL DIMENSIONS APPLY AFTER FINISH
DECIMALS .XX = ± .010 .XXX = ± .005
ANGLES ± 1/2°
FRACTIONS ± 1/64
SURFACE ROUGHNESS 125
REMOVE ALL BURRS

MATERIAL

FINISH

DRAWN 8/24/77 DATE
CHECKED DATE
APPROVED DATE

-IFR INC-
WICHITA, KANSAS

TITLE
TONE GENERATOR ASSY
BOARD NO. 2

SIZE C | PART NUMBER 3-23-0191 | REV F
SCALE 2X1 | WEIGHT | SHEET 1 OF 1

Figure 6-68

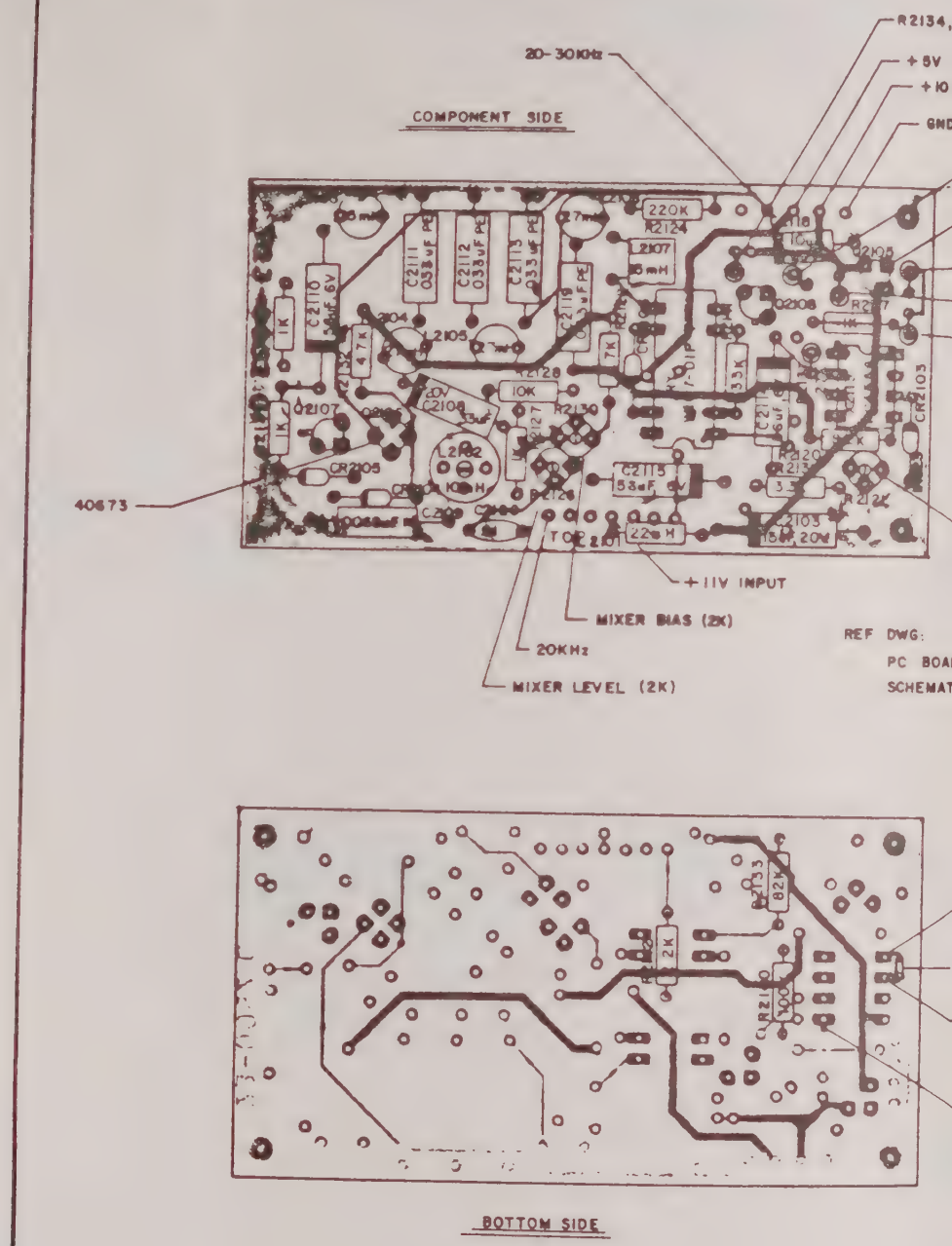

COMPONENT SIDE
20-30KHz
R2134,
+5V
+10
GND
40673
+11V INPUT
MIXER BIAS (2K)
20KHz
MIXER LEVEL (2K)
REF DWG:
PC BOA
SCHEMAT
BOTTOM SIDE

DATE	REV	CHANGE	APP
[illegible]	G	NEW RELEASE	[illegible]
[illegible]	H	INCORP. ECN # 2281 & 2367	[illegible]
[illegible]	J	INC ECN 2685	[illegible]

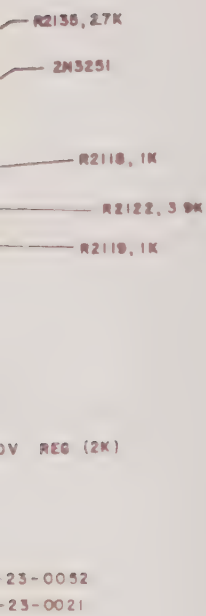

NOTES:

1. ALL RESISTORS ARE 1/4 W., 10% TOLERANCE EXCEPT AS NOTED.
2. ALL CAPACITOR VALUES ARE IN µF EXCEPT AS NOTED.
3. COMPONENT LEADS MAY EXTEND .04 TO .06 BEYOND BOTTOM OF BOARD AFTER SOLDERING.
4. MAXIMUM HEIGHT OF COMPONENTS TO BE .50 FROM COMPONENT SIDE OF BOARD.
5. UNLESS OTHERWISE SPECIFIED;
   ALL TRANSISTORS ARE 2N2222
   ALL DIODES ARE 1N4148

ITEM	REQ'D	PART NO	DESCRIPTION
3	1	1-23-0052	PC BOARD
2	REF	3-23-0021	SCHEMATIC
1	1	1-23-0190	ASSY

LIST OF MATERIALS

NEXT ASSY	QTY	MODEL
23-0188	1	PRI/AMT 10.00

APPLICATION

TOLERANCES
UNLESS OTHERWISE SPECIFIED
ALL DIMENSIONS APPLY AFTER FINISH
DECIMALS .XX = ± .010 .XXX = ± .005
ANGLES ± 1/2°
FRACTIONS ± 1/64
SURFACE ROUGHNESS 125
REMOVE ALL BURRS

DRAWN JJ DATE 8/23/77
CHECKED [illegible] DATE 9/4/77
APPROVED [illegible] DATE 9/12/77

MATERIAL
FINISH

- IFR INC -
WICHITA, KANSAS

TITLE
TONE GENERATOR ASSY
BOARD NO. 3

SIZE C | PART NUMBER 3-23-0192 | REV J
SCALE 2 X 1 | WEIGHT | SHEET 1 OF 1

Figure 6-69

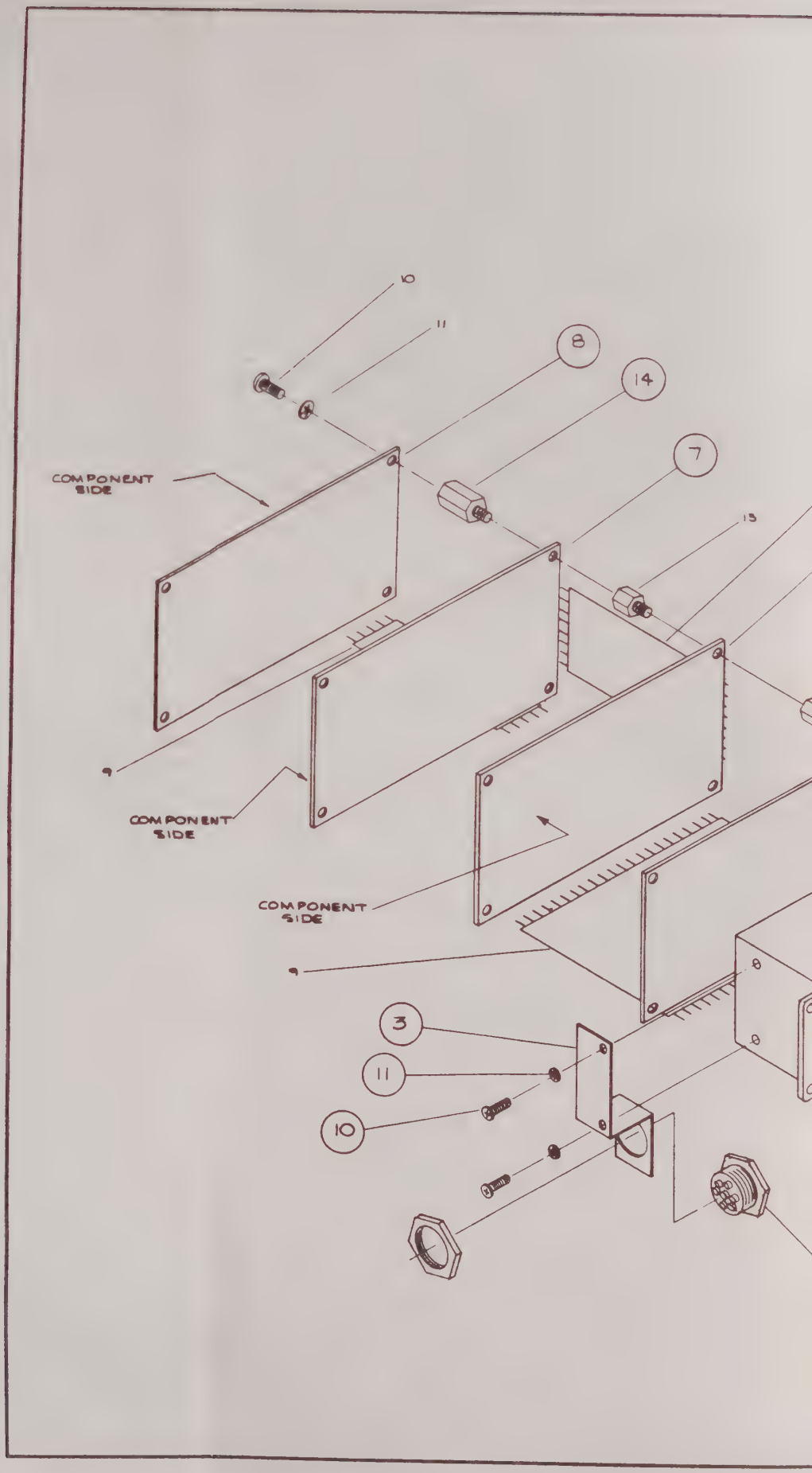
10
11
8
14
7
15
COMPONENT SIDE
9
COMPONENT SIDE
COMPONENT SIDE
9
3
11
10

DATE	REV	CHANGE	APP'D
12-13-77	E	INITIAL RELEASE FT	[illegible]

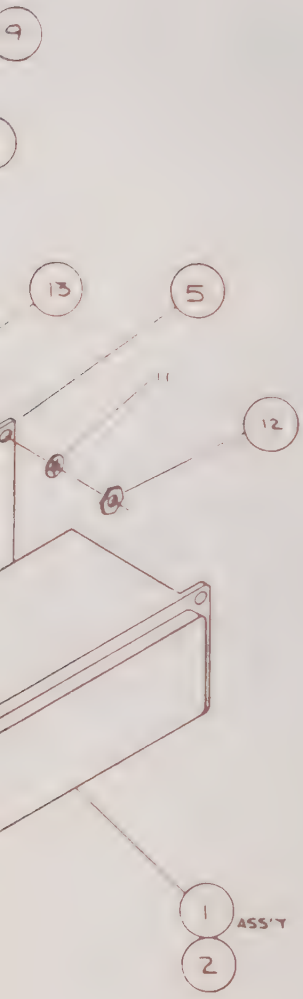

ITEM	REQ'D	PART NO.	DESCRIPTION
14	4	[illegible]	SHELL NUT, "POSITRONICS"
13	8	76-0073-2	SHELL NUT
12	4	#4-40	LARGE PATTERN HEX NUT
11	10	#4	INT. TOOTH LOCKWASHER
10	6	#4-40 X 3/16	PHIL SCREW, BIND HEAD
9	A/R	[illegible]	"ANSLEY"/EQUIV. FLEXSTRIP
8	1	23-0192	TONE GEN. BOARD #3 ASS'Y
7	1	23-0191	TONE GEN. BOARD #2 ASS'Y
6	1	23-0190	TONE GEN. BOARD #1 ASS'Y
5	1	23-0046	TONE GEN. MOTHER BOARD
4	1	N7PLRN	"WINCHESTER"/EQUIV. PLUG
3	1	23-0292	PLUG MOUNTING BRACKET
2	1	23-0018	"EECO"/EQUIV. SWITCH ASS'Y
1	1	23-0188	TONE GENERATOR ASS'Y

LIST OF MATERIALS

NEXT ASS'Y	QTY	MODEL
23-0188	1	FM/AM-1000

APPLICATION

TOLERANCES
UNLESS OTHERWISE SPECIFIED
ALL DIMENSIONS APPLY AFTER FINISH
DECIMALS .XX = ± .010 .XXX = ± .005
ANGLES ± 1/2°
FRACTIONS ± 1/64
SURFACE ROUGHNESS 125
REMOVE ALL BURRS

DRAWN [illegible] DATE 9/6/74
CHECKED [illegible] DATE 9/10/74
APPROVED [illegible] DATE 12/15/77

INSTRUMENT FLIGHT RESEARCH CORPORATION
WICHITA, KANSAS

TITLE
TONE GENERATOR
ASSEMBLY
FM/AM-1000

MATERIAL SEE ABOVE
TREATMENT —
FINISH —

SIZE C | PART NUMBER 3-23-0188 | REV E
SCALE 1:1 | WEIGHT — | SHEET 1 OF 1

Figure 6-70

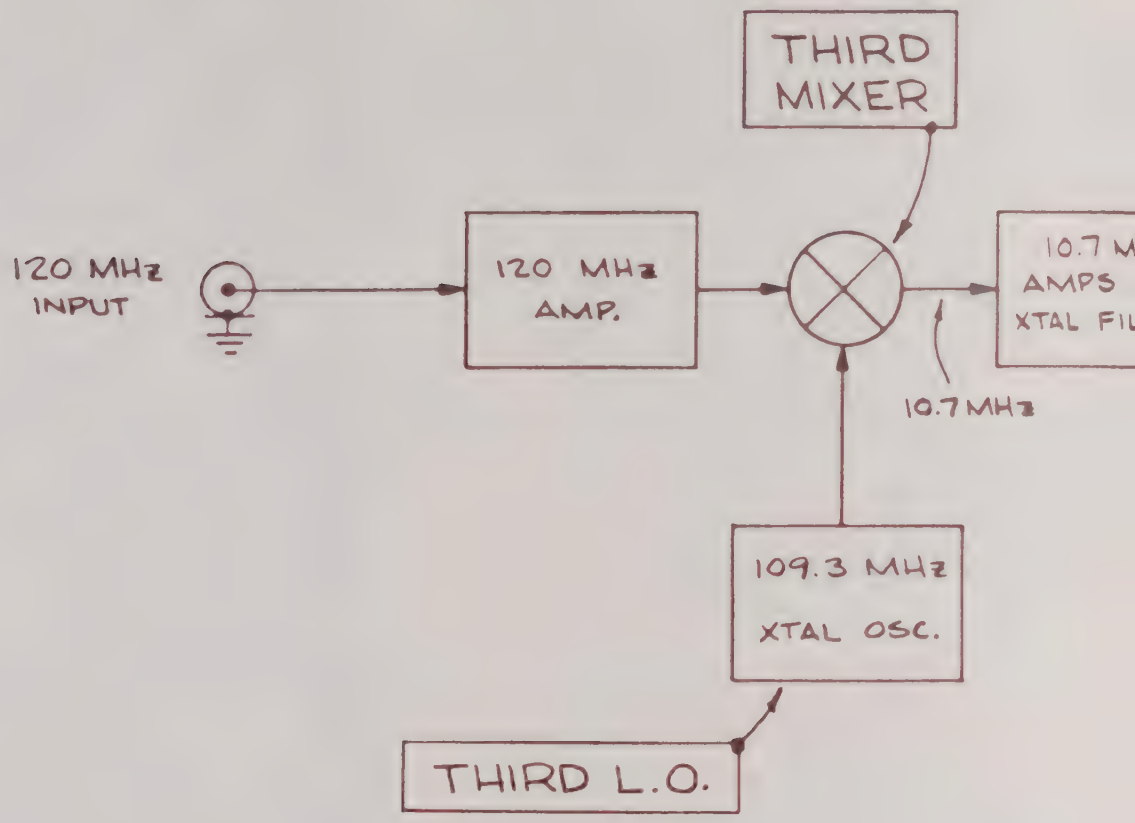
THIRD MIXER
120 MHz INPUT
120 MHz AMP.
10.7 M
AMPS
XTAL FIL
10.7 MHz
109.3 MHz
XTAL OSC.
THIRD L.O.

DATE	REV	CHANGE	APP'D

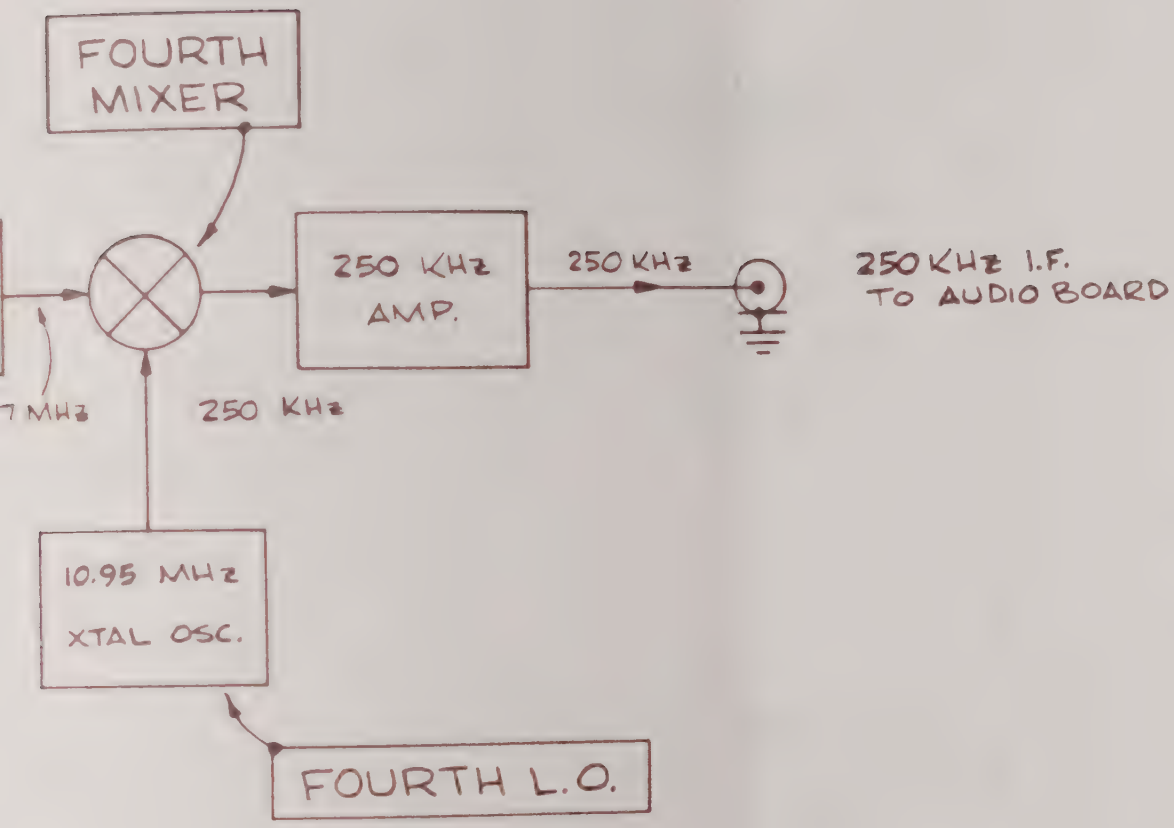

		FM/AM 1000A	1	1	23-0521	BLOCK DIAGRAM
NEXT ASS'Y	QT'Y	MODEL	ITEM	REQ'D	PART NO.	DESCRIPTION

APPLICATION — LIST OF MATERIALS

TOLERANCES
UNLESS OTHERWISE SPECIFIED
ALL DIMENSIONS APPLY AFTER FINISH
DECIMALS: ± .005
ANGLES: ± 1/2°
FRACTIONS: ± 1/64
SURFACE ROUGHNESS 125
REMOVE ALL BURRS

DRAWN SIMMONS 12/10/75
CHECKED SSD 12-12-75
APPROVED DATE 12-10-75

INSTRUMENT FLIGHT RESEARCH CORPORATION
WICHITA, KANSAS

TITLE: 120 MHz RECEIVER BLOCK DIAGRAM

MATERIAL —
TREATMENT —
FINISH —

SIZE B | PART NUMBER 2-23-0521 | REV
SCALE — | WEIGHT — | SHEET 1 OF 1

Figure 6-71

DATE	REV	CHANGE	APP'D
-77	E	INITIAL RELEASE FT	

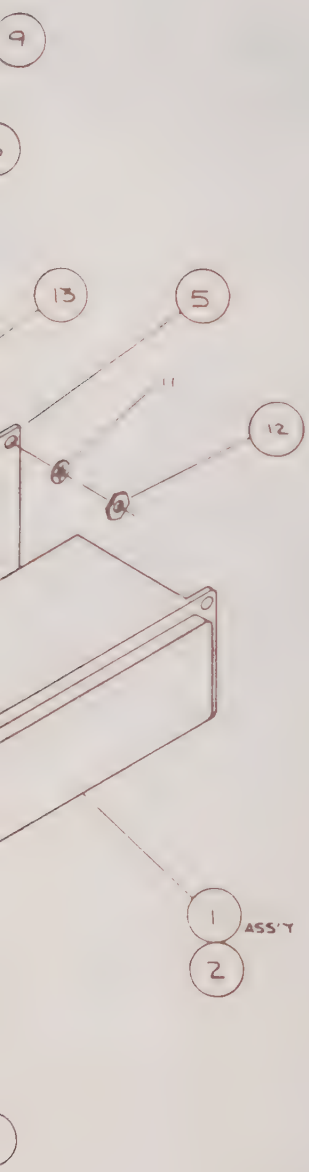

ITEM	REQ'D	PART NO.	DESCRIPTION
14	4	[illegible]	SHELL NUT, "POSITRONICS"
13	8	76-0073-2	SHELL NUT
12	4	#4-40	LARGE PATTERN HEX NUT
11	10	#4	INT. TOOTH LOCKWASHER
10	6	#4-40 X 3/16	PHIL SCREW, BIND HEAD
9	A/R	FSM-3M-24	"ANSLEY"/EQUIV. FLEXSTRIP
8	1	23-0192	TONE GEN. BOARD #3 ASS'Y
7	1	23-0191	TONE GEN. BOARD #2 ASS'Y
6	1	23-0190	TONE GEN. BOARD #1 ASS'Y
5	1	23-0046	TONE GEN. MOTHER BOARD
4	1	N7PLRN	"WINCHESTER"/EQUIV. PLUG
3	1	23-0292	PLUG MOUNTING BRACKET
2	1	23-0018	"ESCO"/EQUIV. SWITCH ASS'Y
1	1	23-0188	TONE GENERATOR ASS'Y

LIST OF MATERIALS

NEXT ASS'Y	QTY	MODEL
23-0188	1	FM/AM-1000

APPLICATION

TOLERANCES
UNLESS OTHERWISE SPECIFIED
ALL DIMENSIONS APPLY AFTER FINISH
DECIMALS .XX ± .010 .XXX ± .005
ANGLES ± 1/2°
FRACTIONS ± 1/64
SURFACE ROUGHNESS 125
REMOVE ALL BURRS

DRAWN [illegible] DATE 9/6/74
CHECKED [illegible] DATE 9-10-74
APPROVED [illegible] DATE 12-15-77

INSTRUMENT FLIGHT RESEARCH CORPORATION
WICHITA, KANSAS

TITLE
TONE GENERATOR
ASSEMBLY
FM/AM-1000

MATERIAL SEE ABOVE
TREATMENT —
FINISH —

SIZE C | PART NUMBER 3-23-0188 | REV E
SCALE 1:1 | WEIGHT — | SHEET 1 OF 1

Figure 6-70

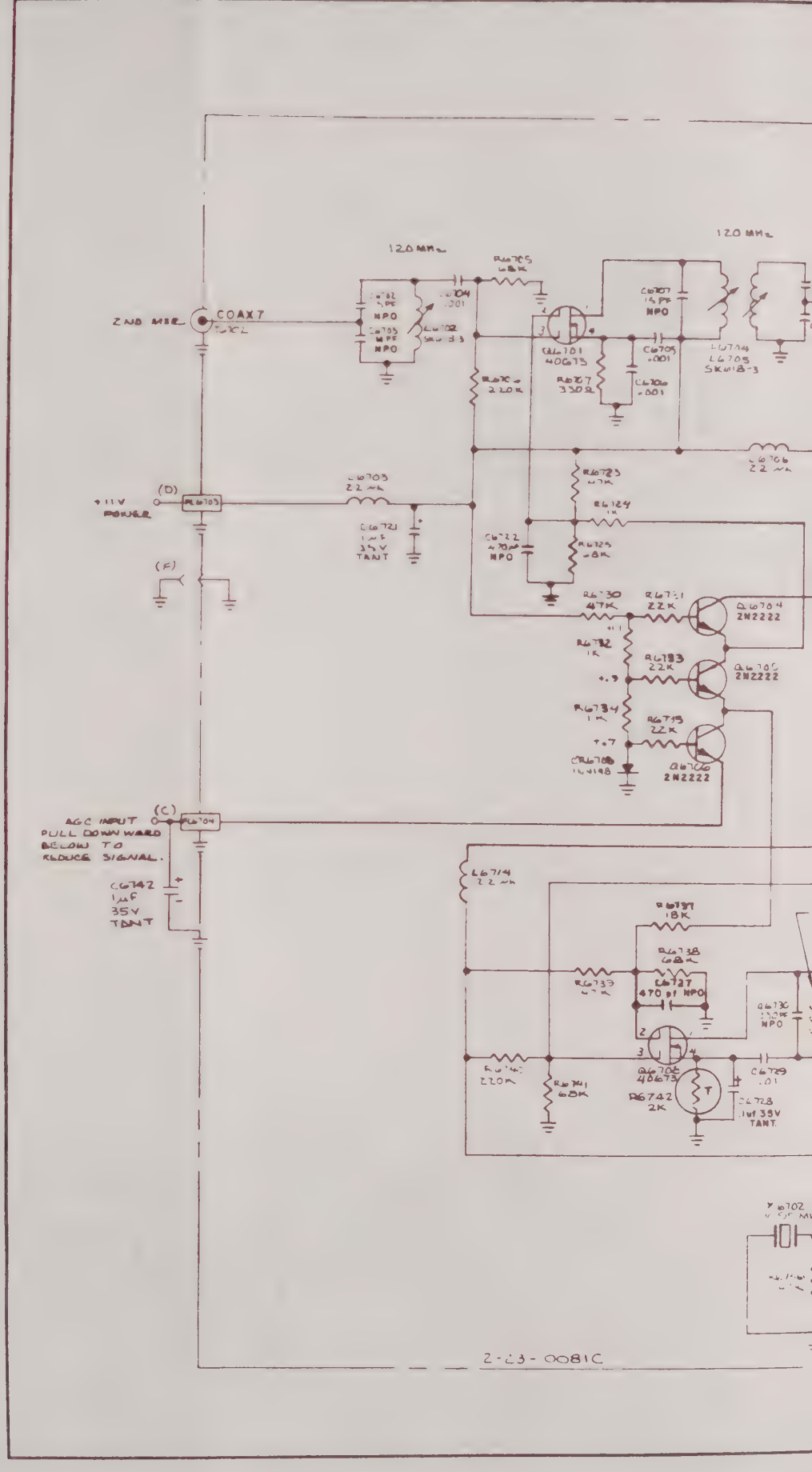

120 MHz
120 MHz
2ND MIX
COAX7
+11V POWER
(D)
(F)
(C)
AGC INPUT PULL DOWNWARD BELOW TO REDUCE SIGNAL.
C6742 1µF 35V TANT
Q6701 40673
Q6704 2N2222
Q6705 2N2222
Q6706 2N2222
Q6708 40673
R6742 2K
2-23-0081C

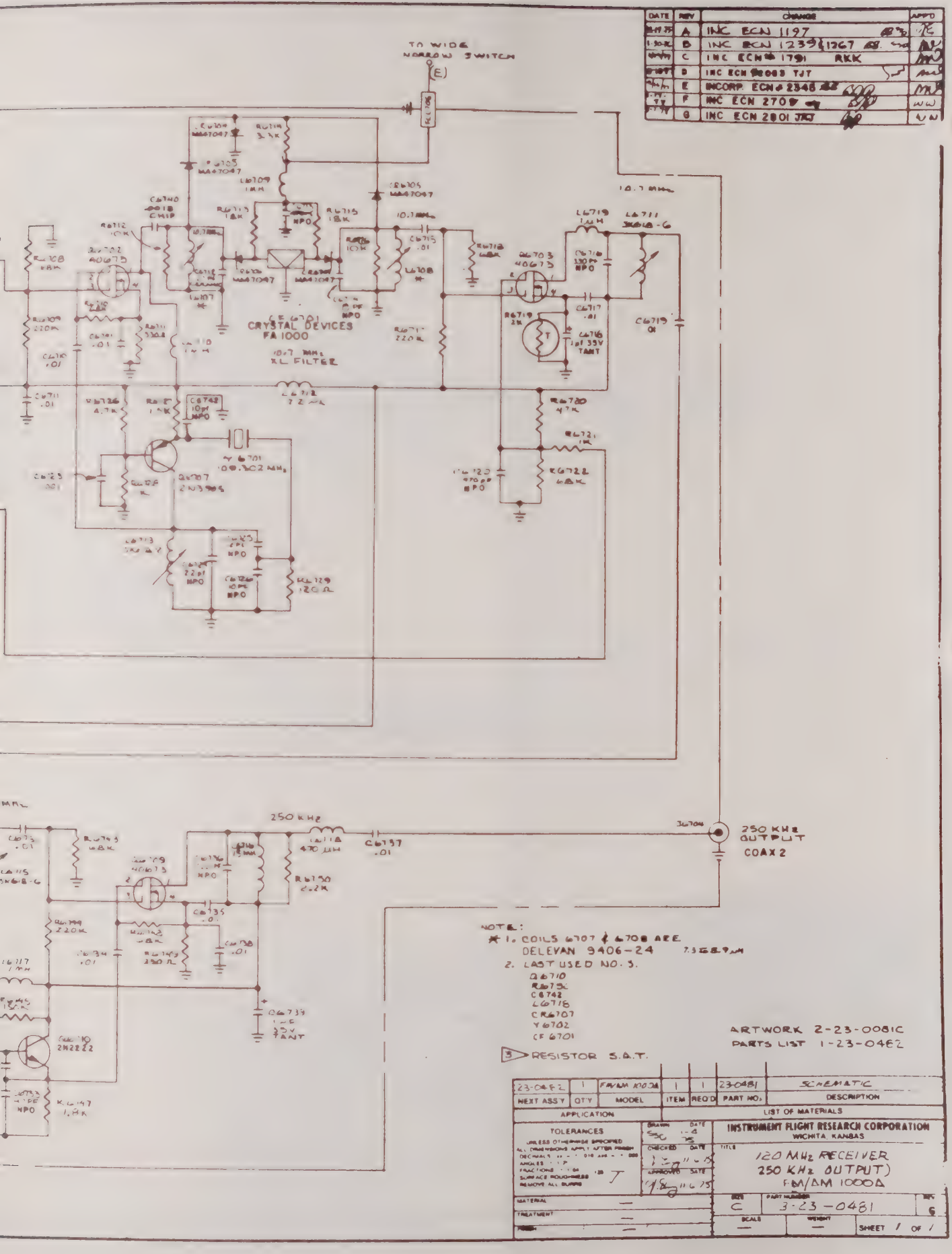

DATE
REV
CHANGE
APP'D
A INC ECN 1197
B INC ECN 1239 & 1267
C INC ECN 1791 RKK
D INC ECN 2083 TJT
E INCORP. ECN 2346
F INC ECN 2709
G INC ECN 2801 JAJ
TO WIDE NARROW SWITCH
(E)
CRYSTAL DEVICES FA 1000
10.7 MHz XL FILTER
250 KHz
250 KHz OUTPUT COAX 2
NOTE:
1. COILS 6707 & 6708 ARE DELEVAN 9406-24
2. LAST USED NO. 5.
Q6710
R6750
C6742
L6718
CR6707
Y6702
CF 6701
3 RESISTOR S.A.T.
ARTWORK 2-23-0081C
PARTS LIST 1-23-0482
23-0482 | 1 | FM/AM 1000A | 1 | 1 | 23-0481 | SCHEMATIC
NEXT ASS'Y | QTY | MODEL | ITEM | REQ'D | PART NO. | DESCRIPTION
APPLICATION
LIST OF MATERIALS
TOLERANCES
INSTRUMENT FLIGHT RESEARCH CORPORATION
WICHITA, KANSAS
120 MHz RECEIVER
250 KHz OUTPUT)
FM/AM 1000A
C
3-23-0481
SHEET 1 OF 1

Figure 6-72

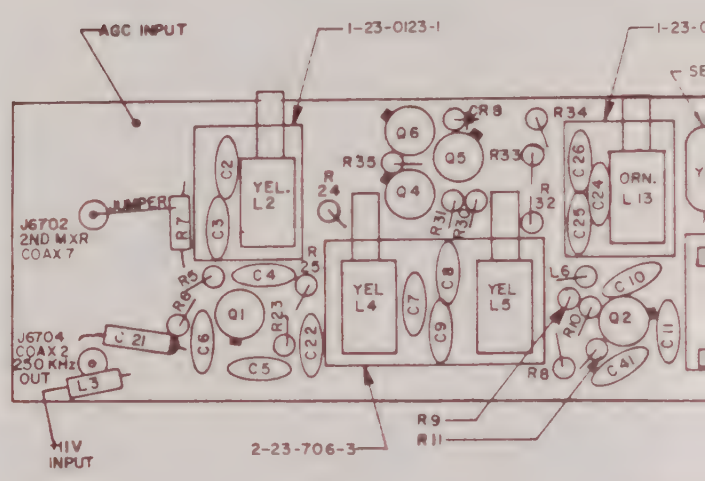

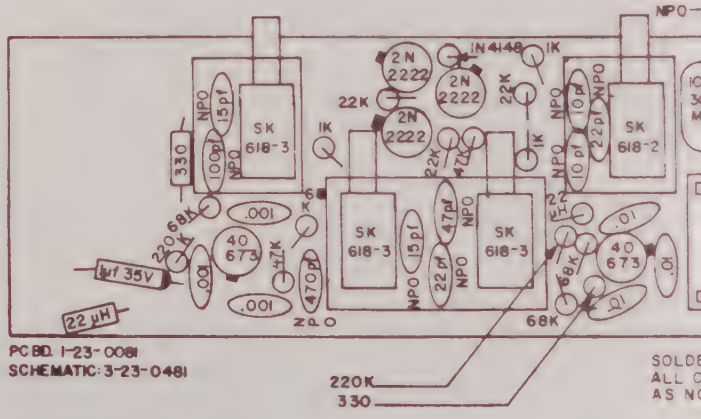

NOTES:

1. ALL RESISTORS ARE 1/4 W., 10% TOLERANCE EXCEPT AS NOTED.
2. ALL CAPACITOR VALUES ARE IN µF EXCEPT AS NOTED.
3. COMPONENT LEADS MAY EXTEND .04 TO .08 BEYOND BOTTOM OF BOARD AFTER SOLDERING.
4. MAXIMUM HEIGHT OF COMPONENTS TO BE .65 FROM COMPONENT SIDE OF BOARD AND .11 FROM BOTTOM SIDE OF BOARD.
5. PLACE CHIP CAPACITORS ON BACK SIDE OF BOARD.
6. ALL COMPONENT DESIGNATORS HAVE 67 PREFIX; i.e. R6701, Q6701 etc.

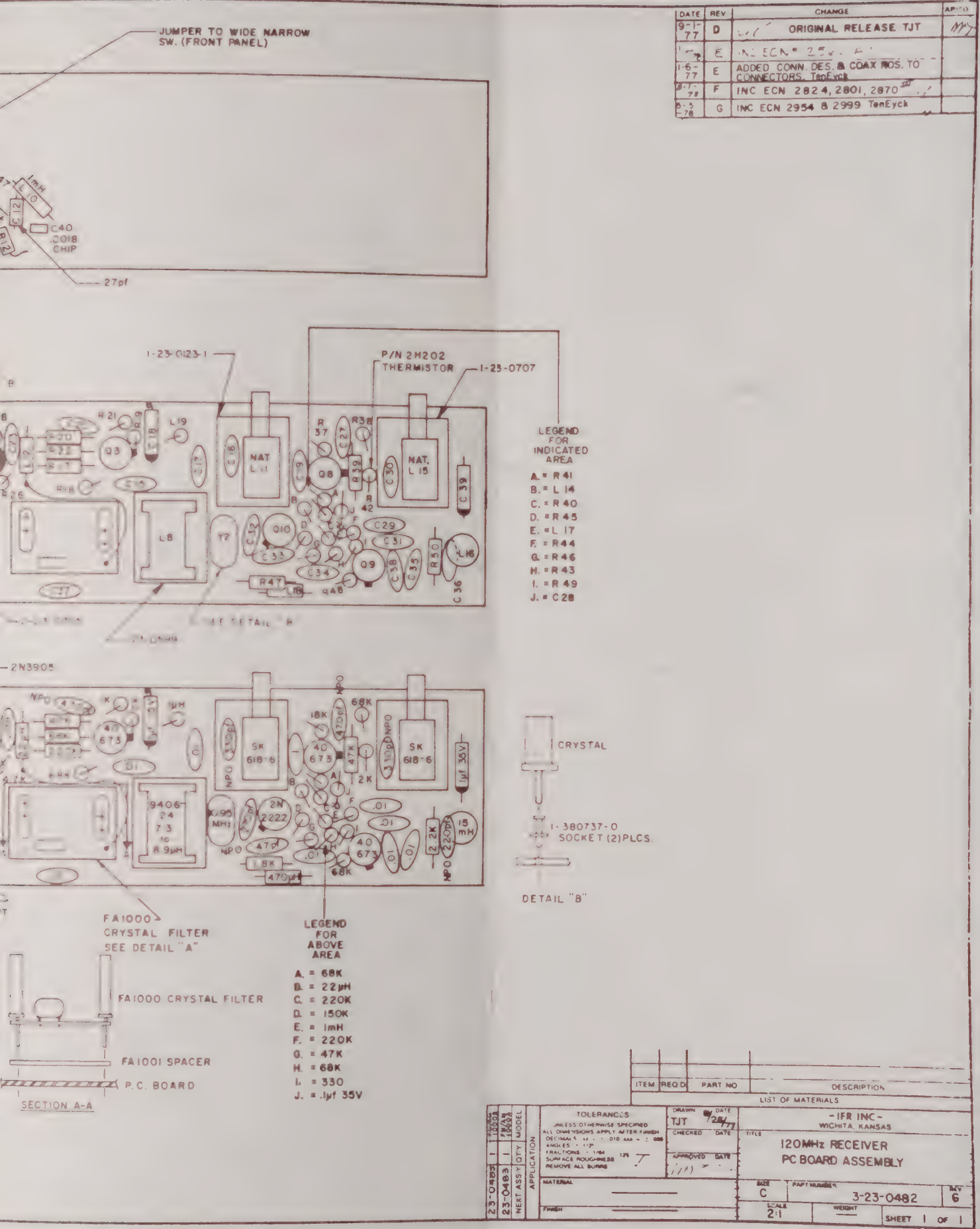

DATE | REV | CHANGE | APP'D
9-1-77 | D | ORIGINAL RELEASE TJT
1-6-77 | E | ADDED CONN. DES. & COAX NOS. TO CONNECTORS. TenEyck
8-7-78 | F | INC ECN 2824, 2801, 2870
8-5-78 | G | INC ECN 2954 & 2999 TenEyck
JUMPER TO WIDE NARROW SW. (FRONT PANEL)
C40 .0018 CHIP
27pf
1-23-0123-1
P/N 2H202 THERMISTOR
1-23-0707
NAT L11
NAT. L15
LEGEND FOR INDICATED AREA
A. = R41
B. = L14
C. = R40
D. = R45
E. = L17
F. = R44
G. = R46
H. = R43
I. = R49
J. = C28
2N3905
SK 618-6
9406 24 73 to 8.9μH
2N 2222
CRYSTAL
1-380737-0 SOCKET (2)PLCS.
DETAIL "B"
FA1000 CRYSTAL FILTER SEE DETAIL "A"
LEGEND FOR ABOVE AREA
A. = 68K
B. = 22μH
C. = 220K
D. = 150K
E. = 1mH
F. = 220K
G. = 47K
H. = 68K
I. = 330
J. = .1μf 35V
FA1000 CRYSTAL FILTER
FA1001 SPACER
P.C. BOARD
SECTION A-A
ITEM | REQ'D | PART NO | DESCRIPTION
LIST OF MATERIALS
TOLERANCES
UNLESS OTHERWISE SPECIFIED ALL DIMENSIONS APPLY AFTER FINISH
DECIMALS ± .010 ANGLES ± 1/2°
FRACTIONS ± 1/64
SURFACE ROUGHNESS 125
REMOVE ALL BURRS
DRAWN TJT DATE 9/28/77
CHECKED DATE
APPROVED DATE
MATERIAL
FINISH
-IFR INC-
WICHITA, KANSAS
TITLE
120MHz RECEIVER
PC BOARD ASSEMBLY
SIZE C
PART NUMBER 3-23-0482
REV 6
SCALE 2:1
WEIGHT
SHEET 1 OF 1
23-0483 1
23-0483 1
NEXT ASSY QTY MODEL
APPLICATION

Figure 6-73

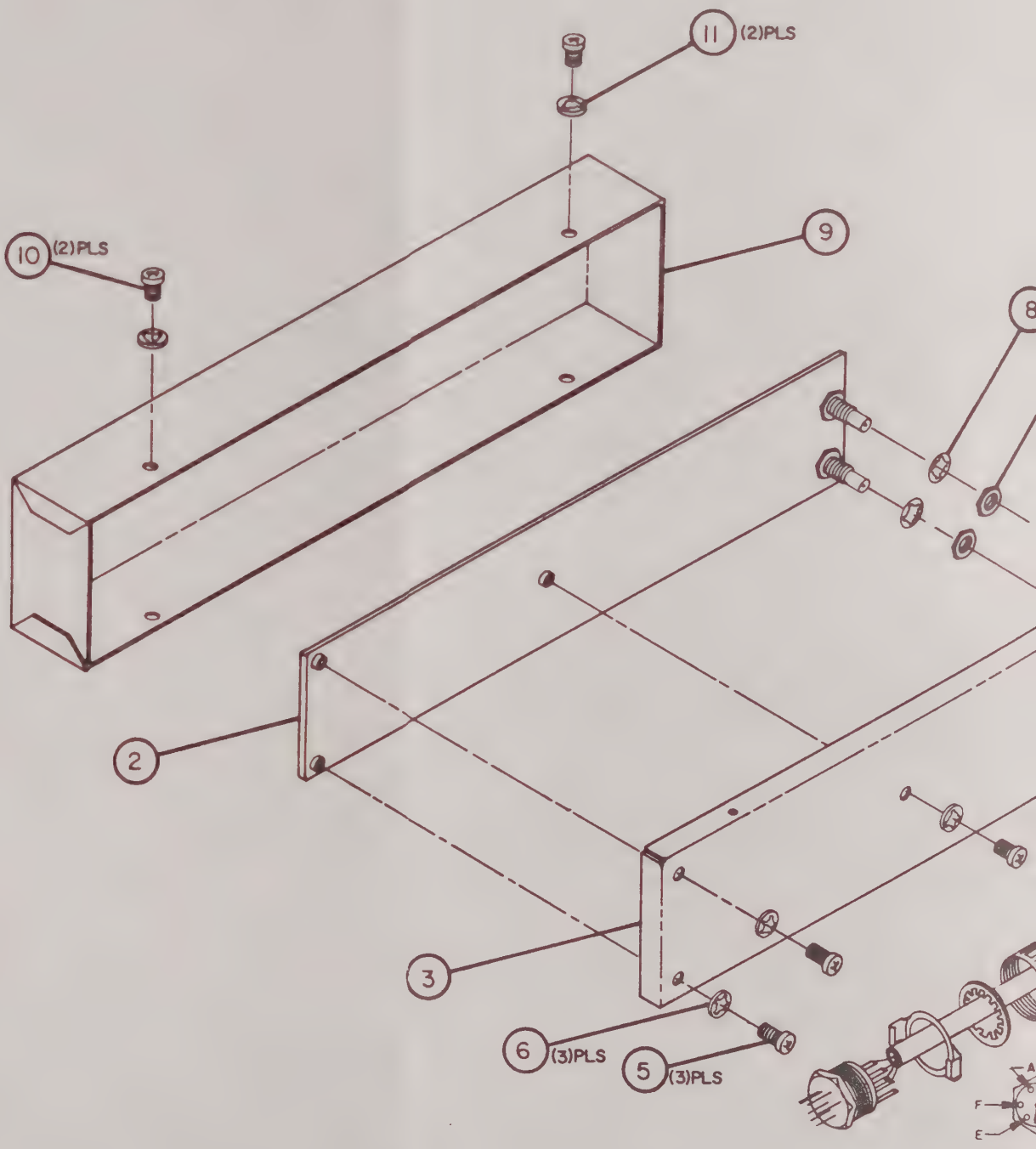

REAR VIEW

L "▭" DENOTES ITEM NOS. REFERENCED IN ITEM 13 WIRING LIST

NOTES:

DATE	REV	CHANGE	APP'D
[illegible]	D	ORIGINAL RELEASE [illegible]	[illegible]
[illegible]	F	INC ECN "[illegible]	[illegible]

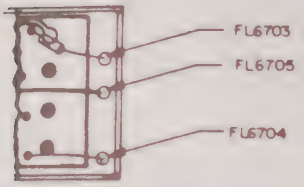

ITEM 13 WIRING LIST

ITEM	FROM	TO	COLOR	WG	LGTH	CODE	FUNCTION
1	FL-4	P8-[illegible]	[illegible]	22	7.0		AGC INPUT
2	FL-5	P8-E	BLUE	"	7.0		WIDE NARROW SW
3	FL-3	P8-D	RED/WHT	"	7.0		+12V PWR INPUT
4	GRND	P8-F	BLK	"	7.0		GROUND

LS

(2)PLS

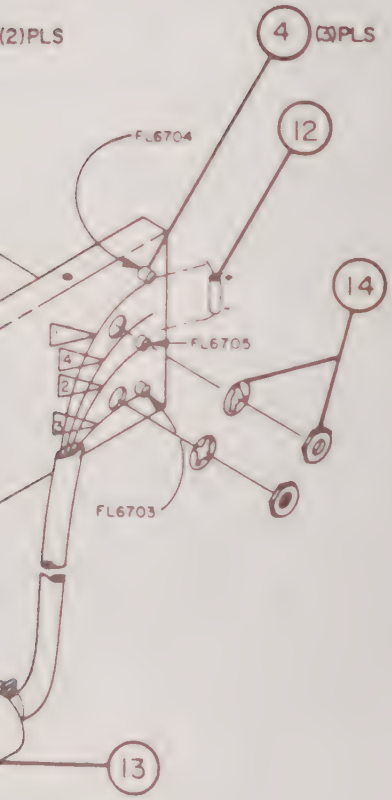

B

C

D

M 13

ITEM	REQ'D	PART NO	DESCRIPTION
14	2	———	ITEM 14 NOW PART OF ITEM 2 CONNECTORS
13	1	M7PLSH19C	"WINCHESTER"/EQUIV (7)POS MALE CONNECTOR
12	1	T350A105M035AS	"KEMET"/EQUIV TANT CAP 1µf 35V
11	2	#4	INT TOOTH LOCKWASHER
10	2	#4-40 x 3/16	PBHMS
9	1	3-23-0484-2	120 MHz RCVR PC BD. ENCLOSURE COVER
8	2	#10	INT TOOTH LOCKWASHER
7	2	#10-32	EXTRA SMALL PATTERN HEX NUT
6	3	#2	INT TOOTH LOCKWASHER
5	3	#2-56 x 1/4	PBHMS
4	3	5H-708-001	"SPECTRUM"/EQUIV FILTER
3	1	3-23-0484-1	120MHz RCVR. ENCLOSURE BASE
2	1	1-23-0482	120MHz RECEIVER PC BOARD ASSEMBLY
1	1	3-23-0483	120MHz RECEIVER ASSEMBLY

LIST OF MATERIALS

TOLERANCES
UNLESS OTHERWISE SPECIFIED
ALL DIMENSIONS APPLY AFTER FINISH
DECIMALS .XX = ± .010 .XXX = ± .005
ANGLES = 1/2°
FRACTIONS = 1/64
SURFACE ROUGHNESS 125 ✓
REMOVE ALL BURRS

DRAWN Tan Eyck DATE 11-1-77
CHECKED DATE
APPROVED DATE

MATERIAL
FINISH

- IFR INC -
WICHITA, KANSAS

TITLE
120 MHz
RECEIVER
ASSEMBLY

SIZE C | PART NUMBER 3-23-0483 | REV
SCALE FULL | WEIGHT —— | SHEET 1 OF 1

23-0492 | 1 | NEXT ASSY | QTY | APPLICATION | MODEL

Figure 6-74

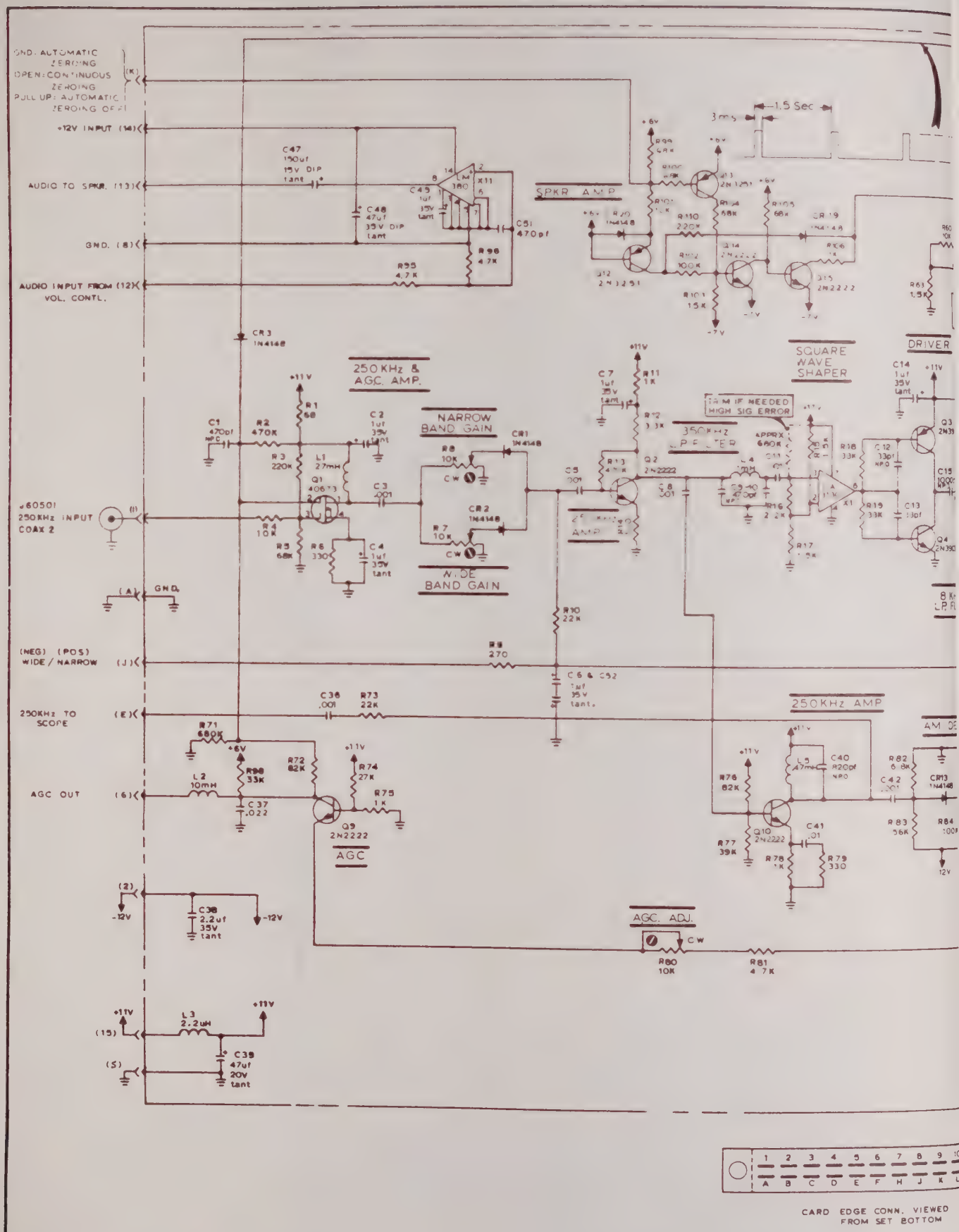
GND. AUTOMATIC ZEROING
OPEN: CONTINUOUS ZEROING
PULL UP: AUTOMATIC ZEROING OFF
+12V INPUT (14)
AUDIO TO SPKR. (13)
GND. (8)
AUDIO INPUT FROM VOL. CONTL. (12)
J60501 250KHz INPUT COAX 2
GND.
(NEG) (POS) WIDE / NARROW (J)
250KHz TO SCOPE (E)
AGC OUT (6)
(2)
-12V
(15)
(S)
SPKR AMP
250KHz & AGC. AMP.
NARROW BAND GAIN
WIDE BAND GAIN
SQUARE WAVE SHAPER
DRIVER
TRIM IF NEEDED HIGH SIG ERROR
350KHz LP FILTER
250KHz AMP
AGC
AGC. ADJ.
1.5 Sec
3 ms
CARD EDGE CONN. VIEWED FROM SET BOTTOM

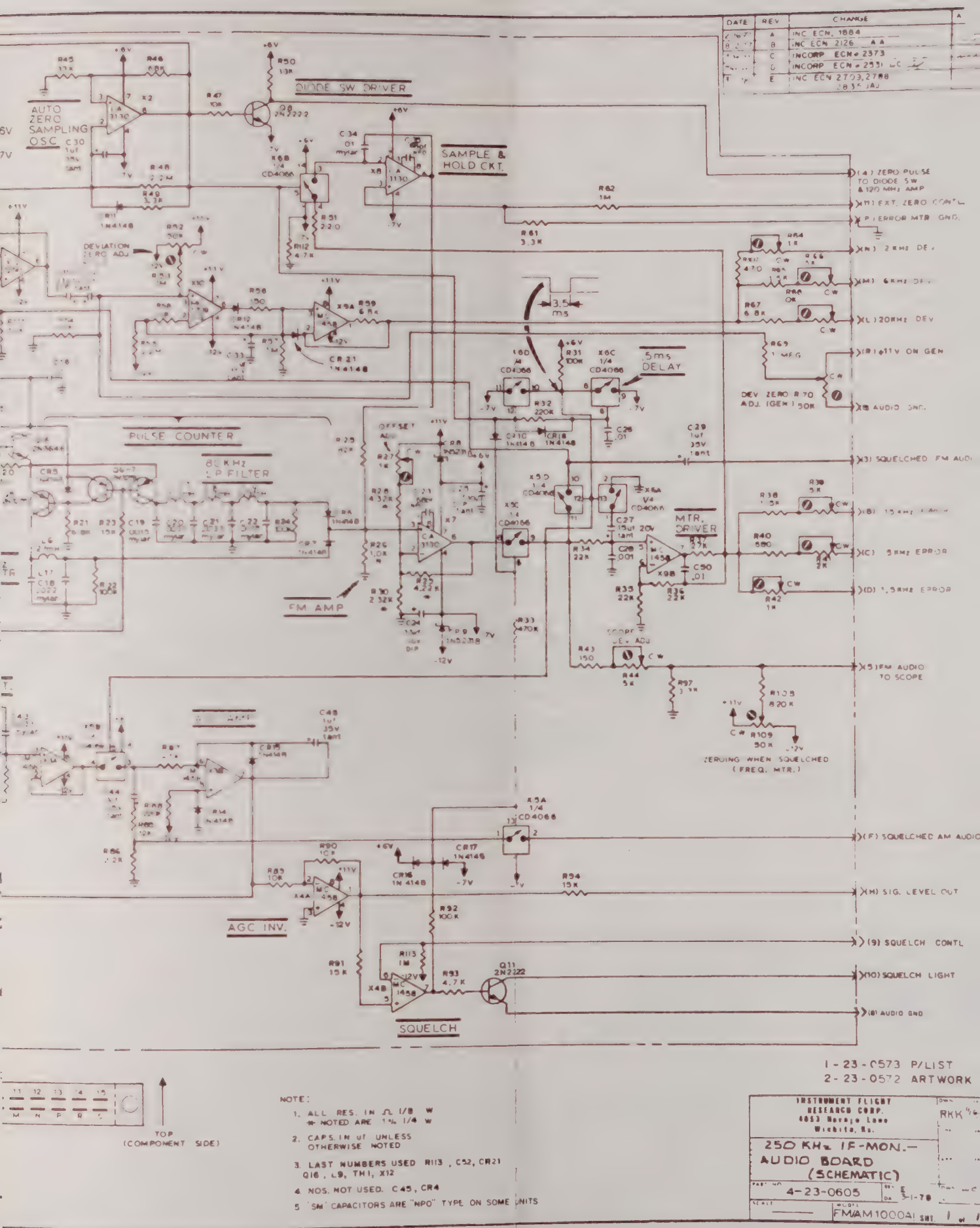

DATE	REV	CHANGE
	A	INC ECN 1884
	B	INC ECN 2126
	C	INCORP ECN # 2373
	D	INCORP ECN # 2531
	E	INC ECN 2703, 2788

1 - 23 - 0573 P/LIST
2 - 23 - 0572 ARTWORK

TOP (COMPONENT SIDE)

NOTE:
1. ALL RES. IN Ω 1/8 W
   * NOTED ARE 1% 1/4 W
2. CAPS. IN uf UNLESS OTHERWISE NOTED
3. LAST NUMBERS USED R113, C52, CR21, Q16, L9, TH1, X12
4. NOS. NOT USED. C45, CR4
5. 'SM' CAPACITORS ARE "NPO" TYPE ON SOME UNITS

INSTRUMENT FLIGHT RESEARCH CORP.
4053 Navajo Lane
Wichita, Ks.

250 KHz IF-MON.-AUDIO BOARD (SCHEMATIC)

4-23-0605

FMAM1000AI

Figure 6-

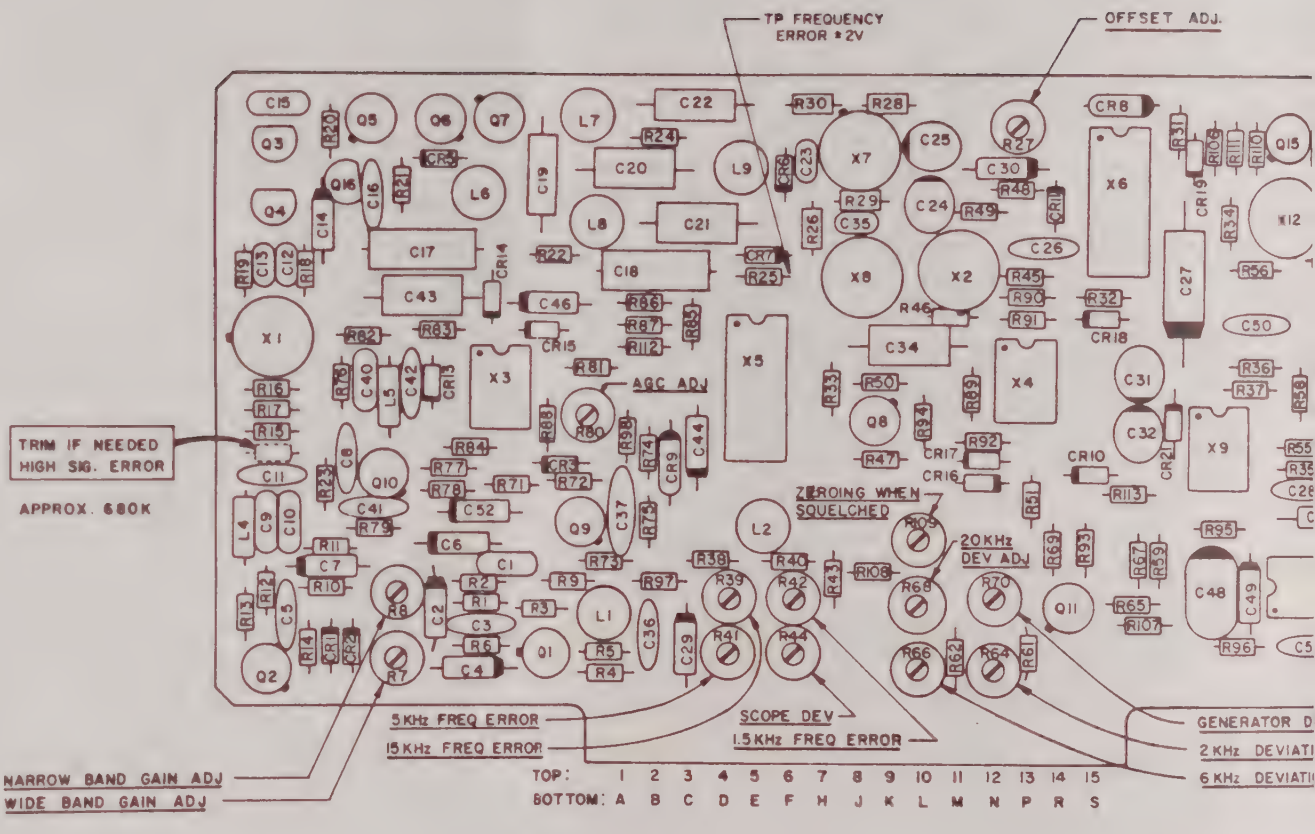

PC BOARD # 2-23-0572
SCHEMATIC # 4-23-0605

PIN #	FUNCTION	PIN #	FUNCTION
15	+11 V	S	GROUND
14	+12 V INPUT	R	+11 V ON GEN
13	AUDIO TO SPEAKER	P	ERROR MTR GND
12	AUDIO INPUT FROM VOL CONTL	N	2 KHz DEVIATION
11	EXT ZERO CONTROL	M	6 KHz DEVIATION
10	SQUELCH LIGHT	L	20 KHz DEVIATION
9	SQUELCH CONTROL	K	GND= AUTOMATIC ZEROING OPEN=CONTINUOUS ZEROING PULL UP= AUTO ZEROING OFF
8	AUDIO GROUND	J	(NEG) (POS) WIDE / NARROW
7	N C	H	SIG LEVEL OUT
6	AGC OUT	F	SQUELCHED AM AUDIO
5	FM AUDIO TO SCOPE	E	250 KHz TO SCOPE
4	ZERO PULSE TO DIODE SW & 1200 MHz AMP	D	1.5 KHz ERROR
3	SQUELCHED FM AUDIO	C	5 KHz ERROR
2	-12 V	B	15 KHz ERROR
1	250 KHz INPUT	A	GROUND

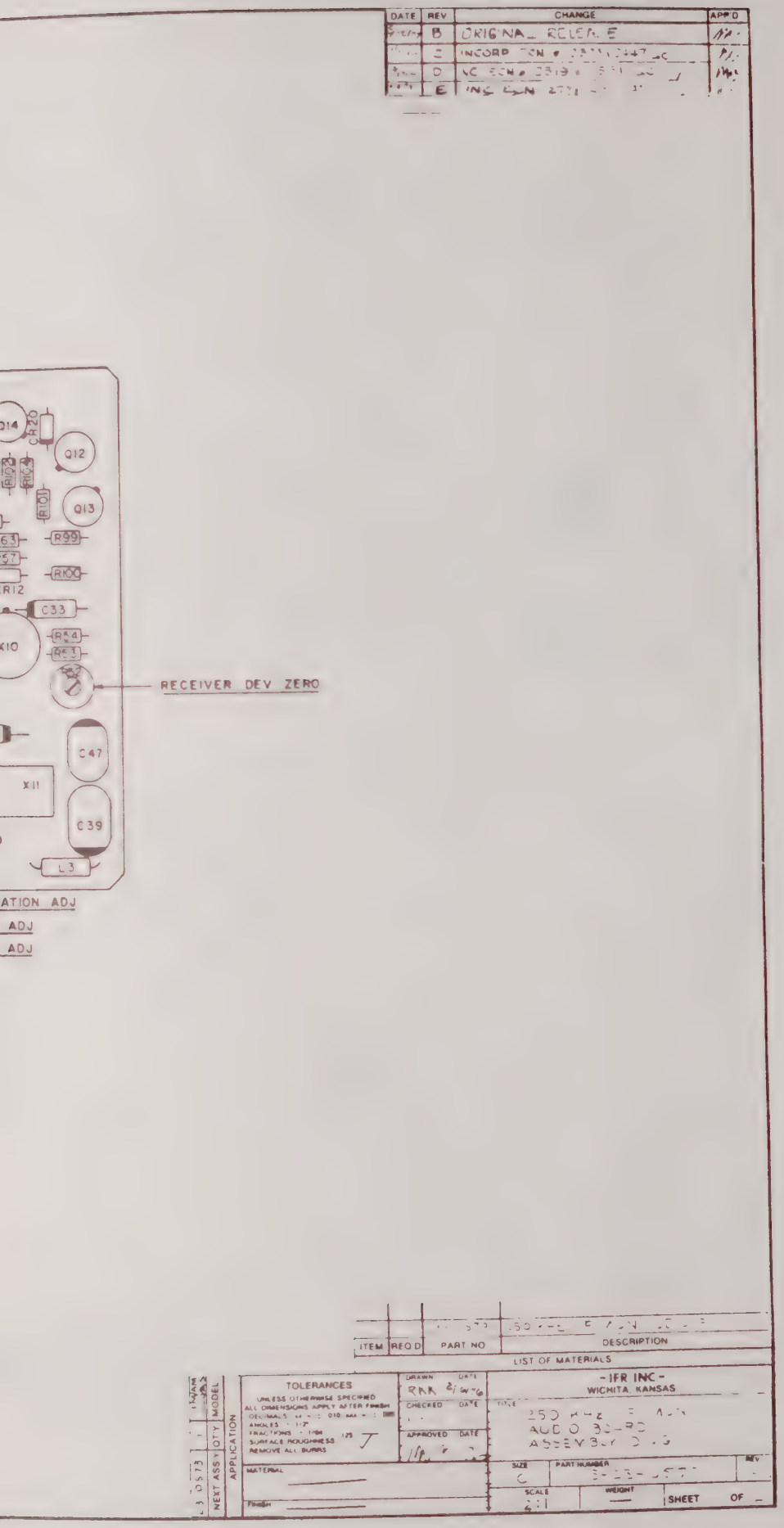
DATE
REV
CHANGE
APP'D
B
ORIGINAL RELEASE
C
INCORP ECN
D
E
Q14
CR20
Q12
R102
R104
R101
Q13
R99
R100
R12
C33
R54
R53
X10
RECEIVER DEV ZERO
C47
X11
C39
L3
ATION ADJ
ADJ
ADJ
ITEM
REQ'D
PART NO
DESCRIPTION
LIST OF MATERIALS
TOLERANCES
UNLESS OTHERWISE SPECIFIED
ALL DIMENSIONS APPLY AFTER FINISH
ANGLES
FRACTIONS
SURFACE ROUGHNESS
REMOVE ALL BURRS
DRAWN
DATE
CHECKED
DATE
APPROVED
DATE
MATERIAL
FINISH
-IFR INC-
WICHITA, KANSAS
TITLE
SIZE
PART NUMBER
REV
SCALE
WEIGHT
SHEET
OF
NEXT ASSY
QTY
MODEL
APPLICATION

Figure 6-76

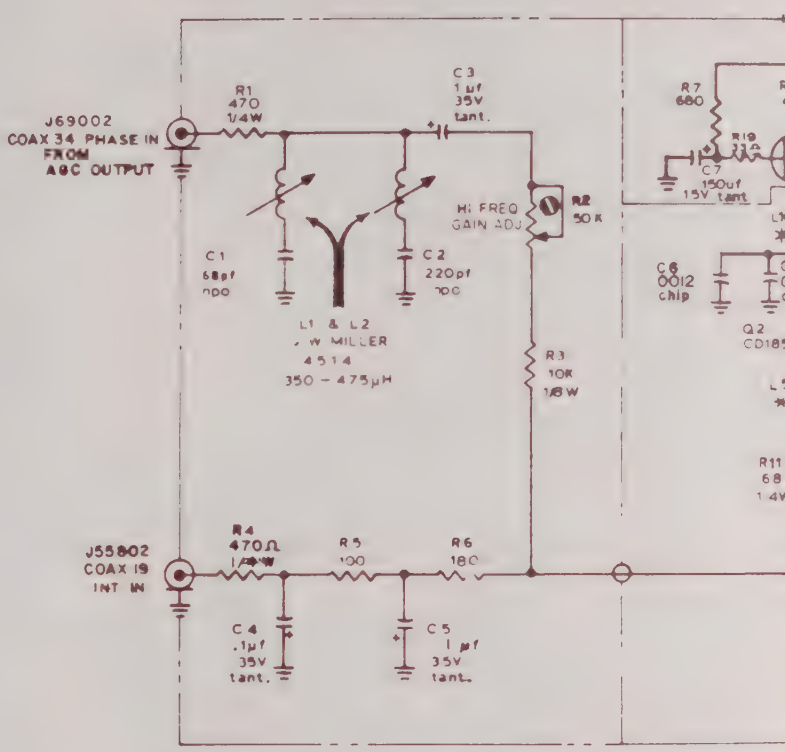

NOTES:

1. ALL RESISTORS ARE 1/8 W 10% EXCEPT
2 ALL RESISTANCES ARE IN OHMS EXCE
3 ALL CAPACITANCES ARE IN MICROFA

DATE	REV	CHANGE	A
2-16-77	A	INCORP ECN # 1943	
5-4-77	B	INCORP ECN# 2013	
7/27/77	C	INCORP. ECN# 2193	
[illegible]	D	INCORP ECN # 2316	
[illegible]	E	[illegible]	
[illegible]	F	INC. ECN # 2647	
[illegible]	G	INC ECN # 2869	

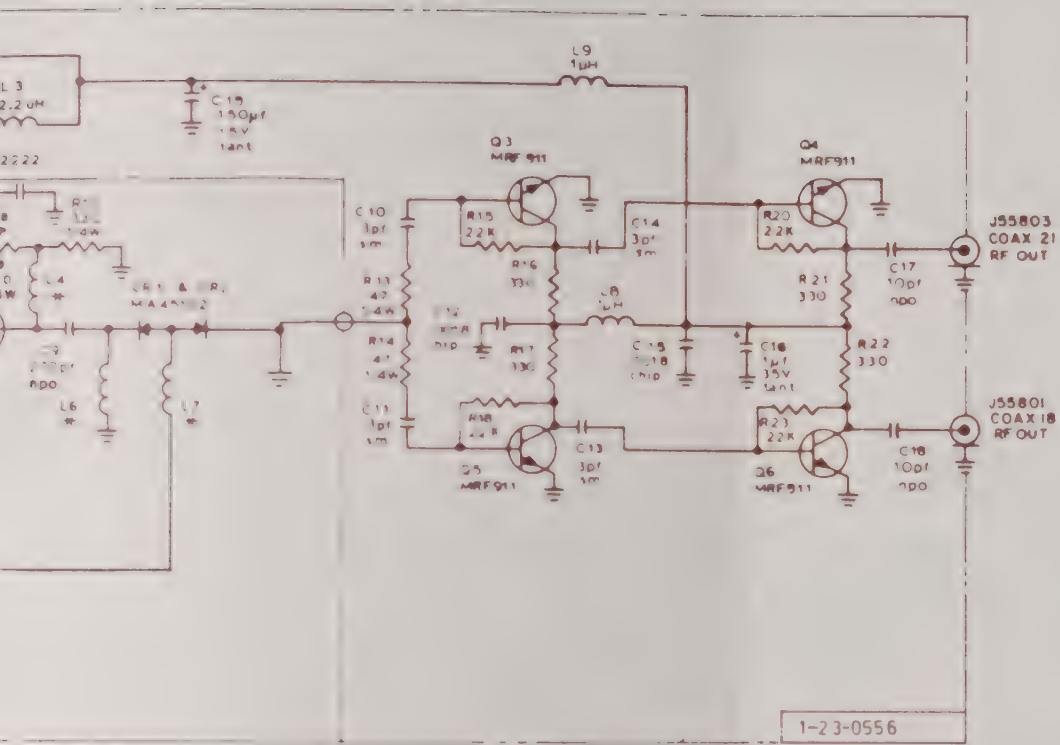

* L4, L5, L6, L7, L10 ARE 1-23-0597

N

SHOWN

EXCEPT AS SHOWN

LAST USED NO'S
C21
CR2
L8
Q6
R25

LIST OF MATERIALS

TOLERANCES

- IFR INC -
WICHITA, KANSAS

1200-2200MHz OSC., BUFFER, TUNE SUMMATION SCHEMATIC

C 3-23-0558 G

APPLICATION

Figure 6-77

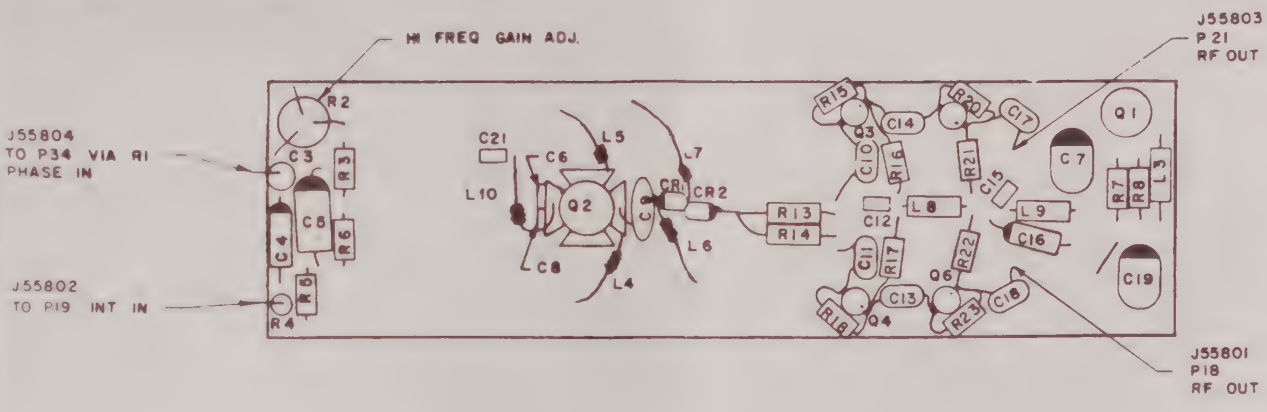

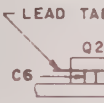

ASSEMBLY

1. THE CHI
NON-MET
2. THE TWO
TRANSIST
TABS OF
OTHER.
ARE MOU
3. C9 CAPA
ATTACHE
LEAD TO
C9 SHOU
VARIED
4. CR2 DIO
THE BUS
RESISTOR
5. THE LEA
TO THE
POSSIBLE

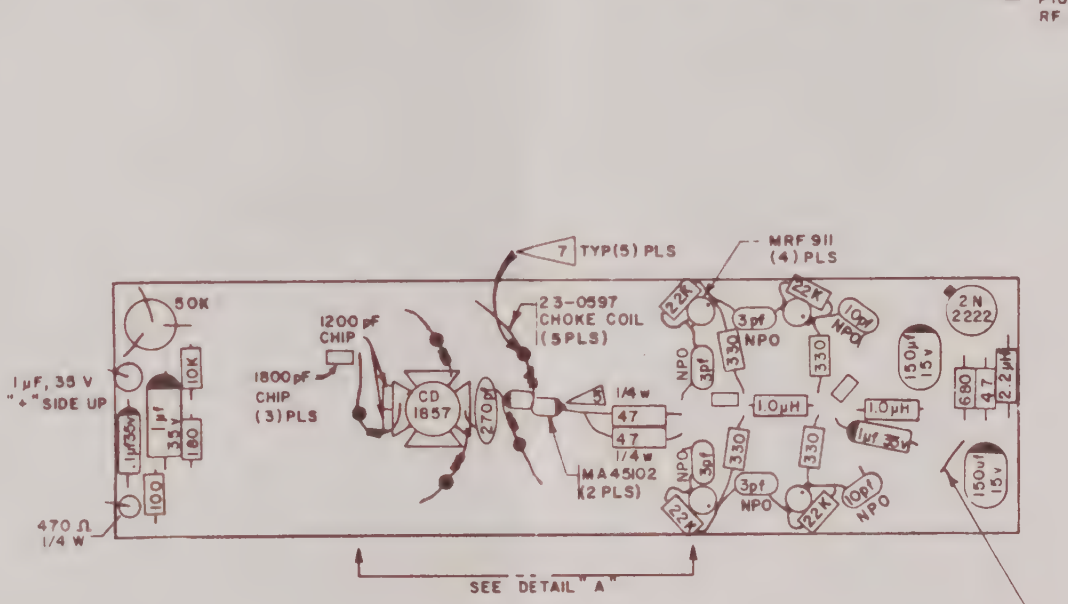

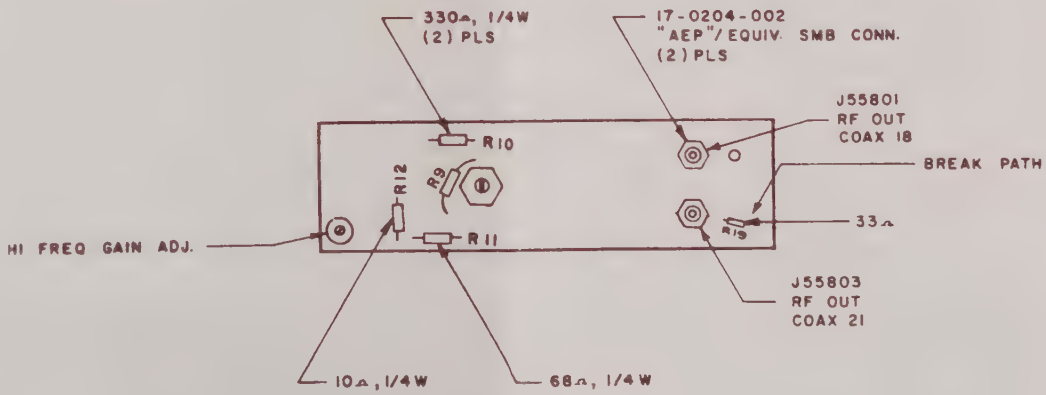

	C	ORIGINAL RELEASE	
	D	INC. ECN # [illegible]	
	E	INCORP ECN # 2193	
		[illegible]	
	H	[illegible]	
	H1	INC ECN [illegible]	

DETAIL "A"

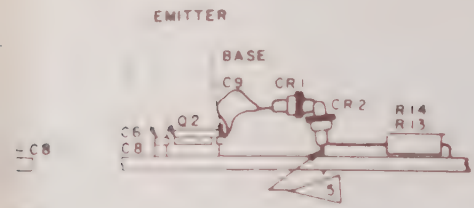

ES.
CAPACITORS MUST BE HANDLED WITH THE AID OF
IC TWEEZERS, OR BY USING LEAD TABS
IP CAPACITORS ARE MOUNTED AS CLOSE TO THE
AS POSSIBLE AND BACK-TO-BACK, WITH THE LEAD
E TWO CAPACITORS EXTENDING AWAY FROM EACH
I LEAD TAB FLUSH WITH COLLECTOR AFTER CHIPS
ED.
IR IS MOUNTED IN A VERTICAL PLANE WITH ONE END
S CLOSE AS POSSIBLE TO THE TRANSISTOR (BASE
AS SHORT AS POSSIBLE). THE OTHER LEAD OF
BE APPROX. 25 SO THAT CR1 LEAD JOINT MAY BE
NG VCO ALIGNMENT
I SHOULD BE MOUNTED APPROX VERTICAL AND ON
IRE JUST ABOVE THE JUNCTION OF R13 AND R14
CR1 & CR2 LEADS TO BE AS SHORT AS POSSIBLE
OF THE FIVE COILS (23-0597) THAT ARE ATTACHED
ANSISTOR OR DIODE SHOULD BE AS SHORT AS
SEE FLAG # 7.

NOTES:

1. ALL RESISTORS ARE 1/8W, 10% TOLERANCE EXCEPT AS NOTED
2. ALL CAPACITOR VALUES ARE IN µF EXCEPT AS NOTED
3. COMPONENT LEADS MAY EXTEND .04 TO .06 BEYOND BOTTOM OF BOARD AFTER SOLDERING
4. MAXIMUM HEIGHT OF COMPONENTS TO BE .35 FROM COMPONENT SIDE OF BOARD
5. USE NO 22 AWG BUSS WIRE TO CONNECT MA45102 DIODE & (2) 47Ω RESISTORS TO GROUND
6. FM/AM 1000A
7. APPLY 1/16" DIA STRAND OF "GE"/EQUIV. RTV FROM GROUND LEAD OF COIL TO SURFACE OF BOARD, APPROX 1/8" FROM COIL.

ITEM	REQ'D	PART NO	DESCRIPTION
1	1	23-0559	1200-2200 MHz OSC PC BD ASS'Y

LIST OF MATERIALS

23-0560	1	6	NEXT ASS'Y / QTY / MODEL
			APPLICATION

TOLERANCES
UNLESS OTHERWISE SPECIFIED
ALL DIMENSIONS APPLY AFTER FINISH
DECIMALS ± .010 .XXX ± .005
ANGLES ± 1/2°
FRACTIONS ± 1/64
SURFACE ROUGHNESS 125
REMOVE ALL BURRS

MATERIAL
FINISH

DRAWN RKK DATE 4 5 77
CHECKED WW DATE 4-14-77
APPROVED DATE

-IFR INC-
WICHITA KANSAS

TITLE
1200 - 2200 MHz
OSCILLATOR P.C.
BOARD ASS'Y

SIZE C | PART NUMBER 3-23-0559 | REV
SCALE | WEIGHT 2 1/8 NOTED | SHEET 1 OF 1

Figure 6-78

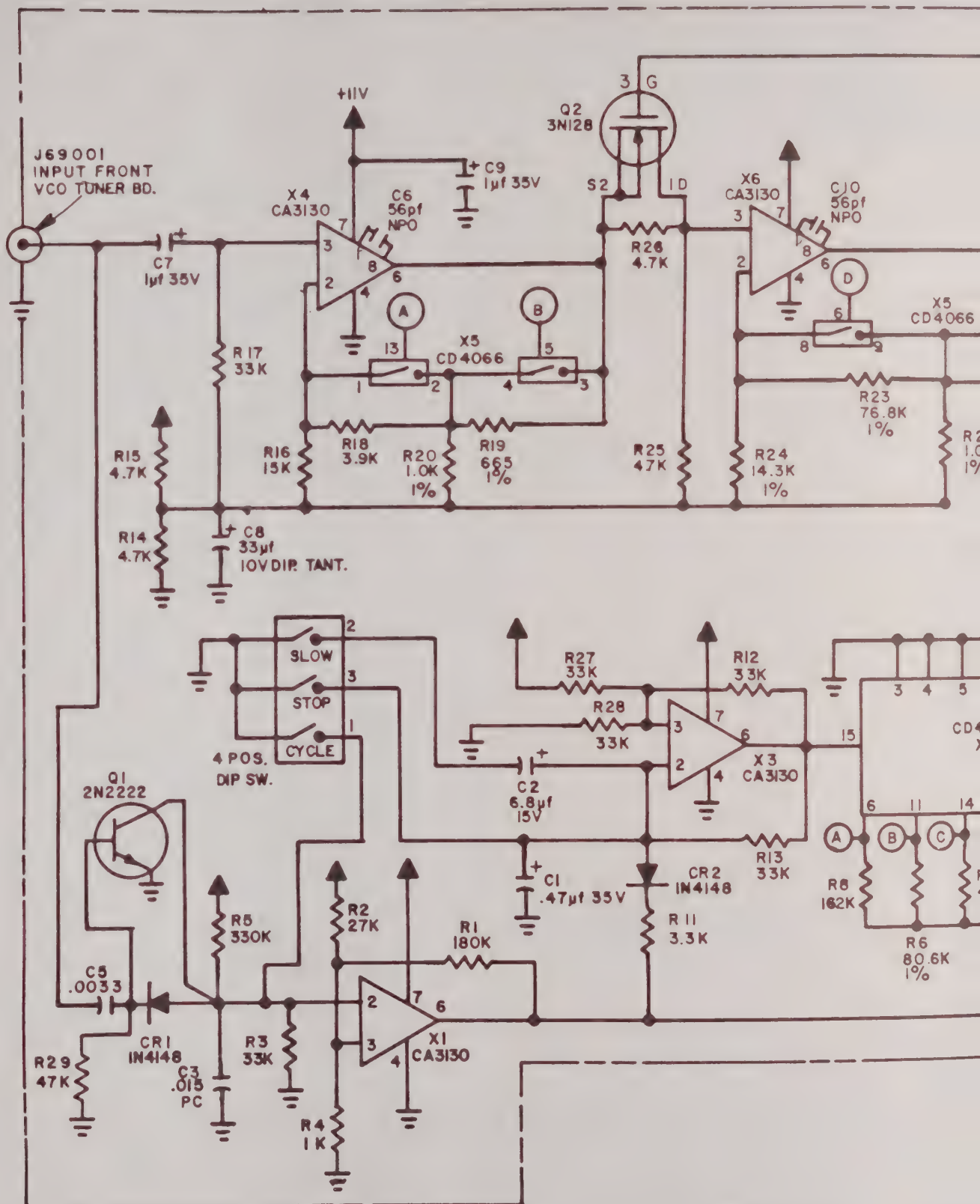

NOTES:

1. ALL RESISTORS ARE 1/4W 10% TOL & OHMS UNLESS OTHERWISE SPECIFED.

2 LAST NOS. USED C10, R29, X6, D2, &

3. ALL CAPACITORS ARE IN µf EXCEPT A

DATE	REV	CHANGE	APP
1-19-78	A	INC. ECN NO. 2717 A.A.	WW
3-9-78	B	INC ECN 2819 2709 JAJ	WW
4-10-78	C	INC ECN 2912	WW

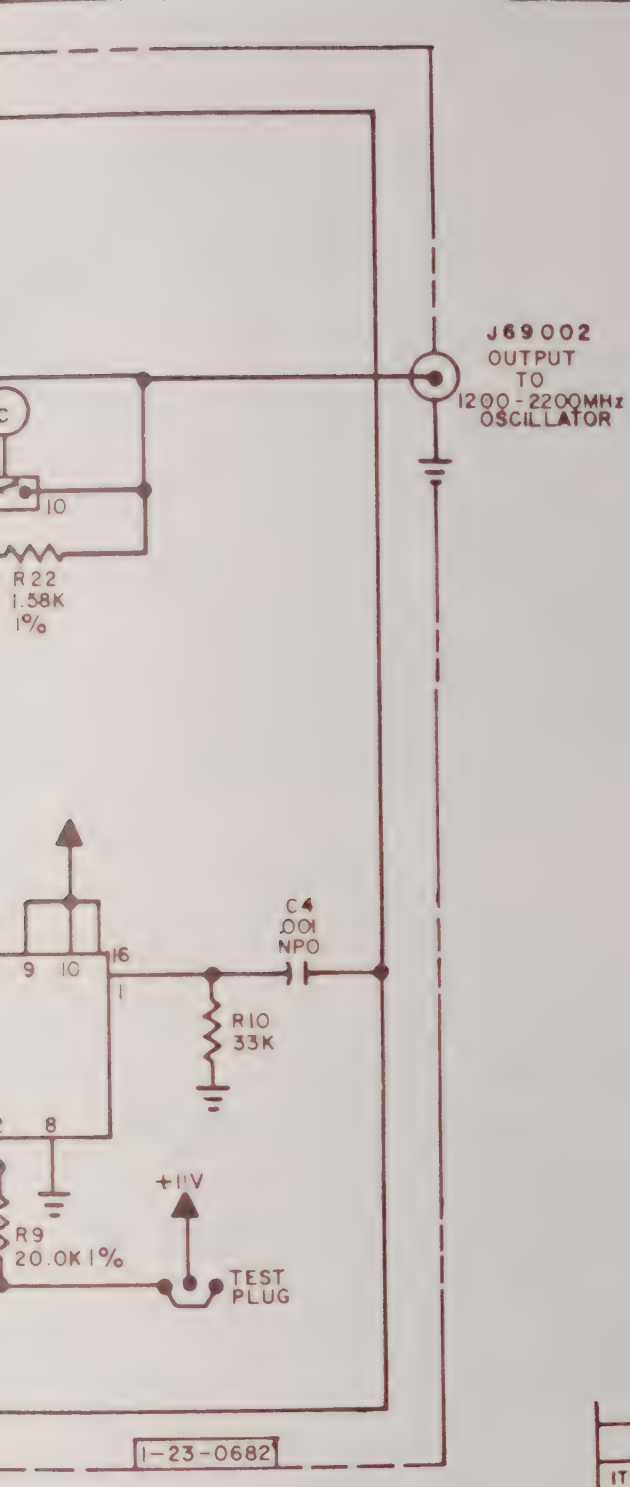

EFFECTIVE: 1000A S/N 882 & ON
1000S S/N 170 & ON

ITEM	REQ'D	PART NO.	DESCRIPTION

LIST OF MATERIALS

MODEL	QTY	NEXT ASSY
FM AN 1000A	1	23-0644
FM AN 1000A	1	23-0216

APPLICATION

TOLERANCES
UNLESS OTHERWISE SPECIFIED
ALL DIMENSIONS APPLY AFTER FINISH
DECIMALS: .xx = ± .010 .xxx = ± .005
ANGLES: ± 1/2°
FRACTIONS ± 1/64
SURFACE ROUGHNESS 125 ✓
REMOVE ALL BURRS

MATERIAL

FINISH

DRAWN TenEyck DATE 11-29-77
CHECKED DATE 11-29-77
APPROVED DATE 12-10-77

-IFR INC-
WICHITA, KANSAS

TITLE
AGC SYSTEM
SCHEMATIC

SIZE B | PART NUMBER 2-23-0690 | REV C

SCALE | WEIGHT | SHEET 1 OF 1

Figure 6-

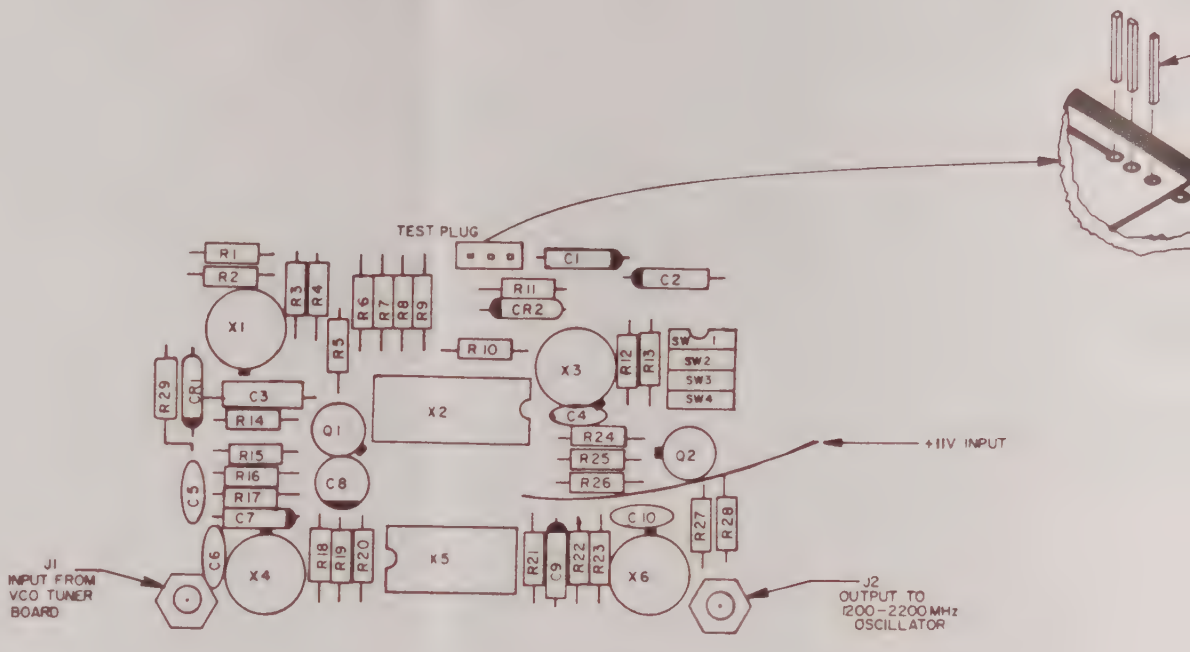

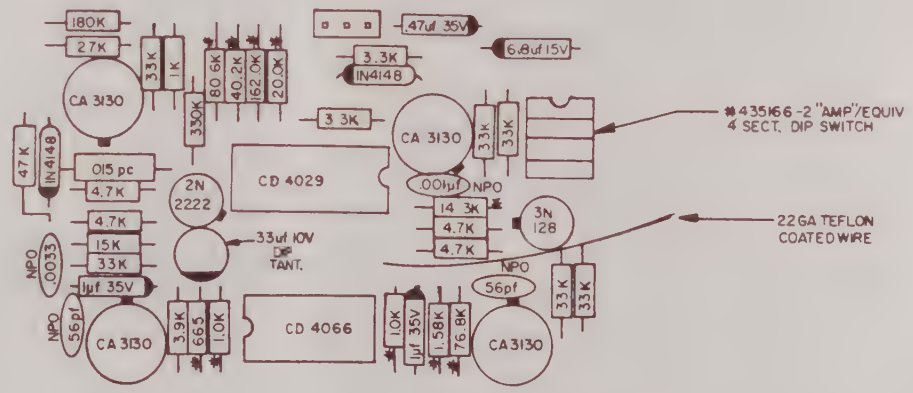

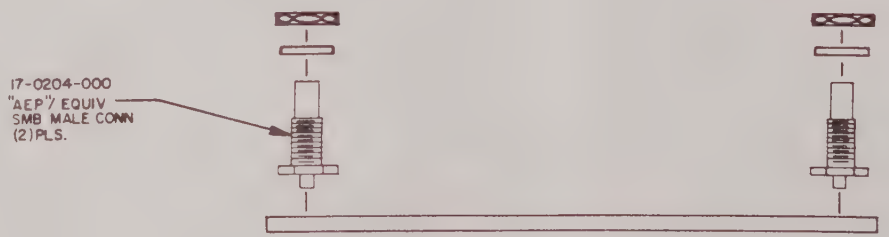

7. SCHEMATIC NO. 2-23-0690
6. PC BOARD NO. 1-23-0682
5. COMPONENT LEADS MAY EXTEND .04 TO
OF BOARD AFTER SOLDERING.
4. MAX. HEIGHT OF COMPONENTS TO BE .37
FROM COMPONENT SIDE OF BOARD.
3. ALL CAPACITORS ARE IN μf EXCEPT AS NOT
2. "*" DENOTES 1/4W, 1% TOL. RESISTORS.
1. ALL RESISTORS ARE 1/4W, 10% TOL. EXCE

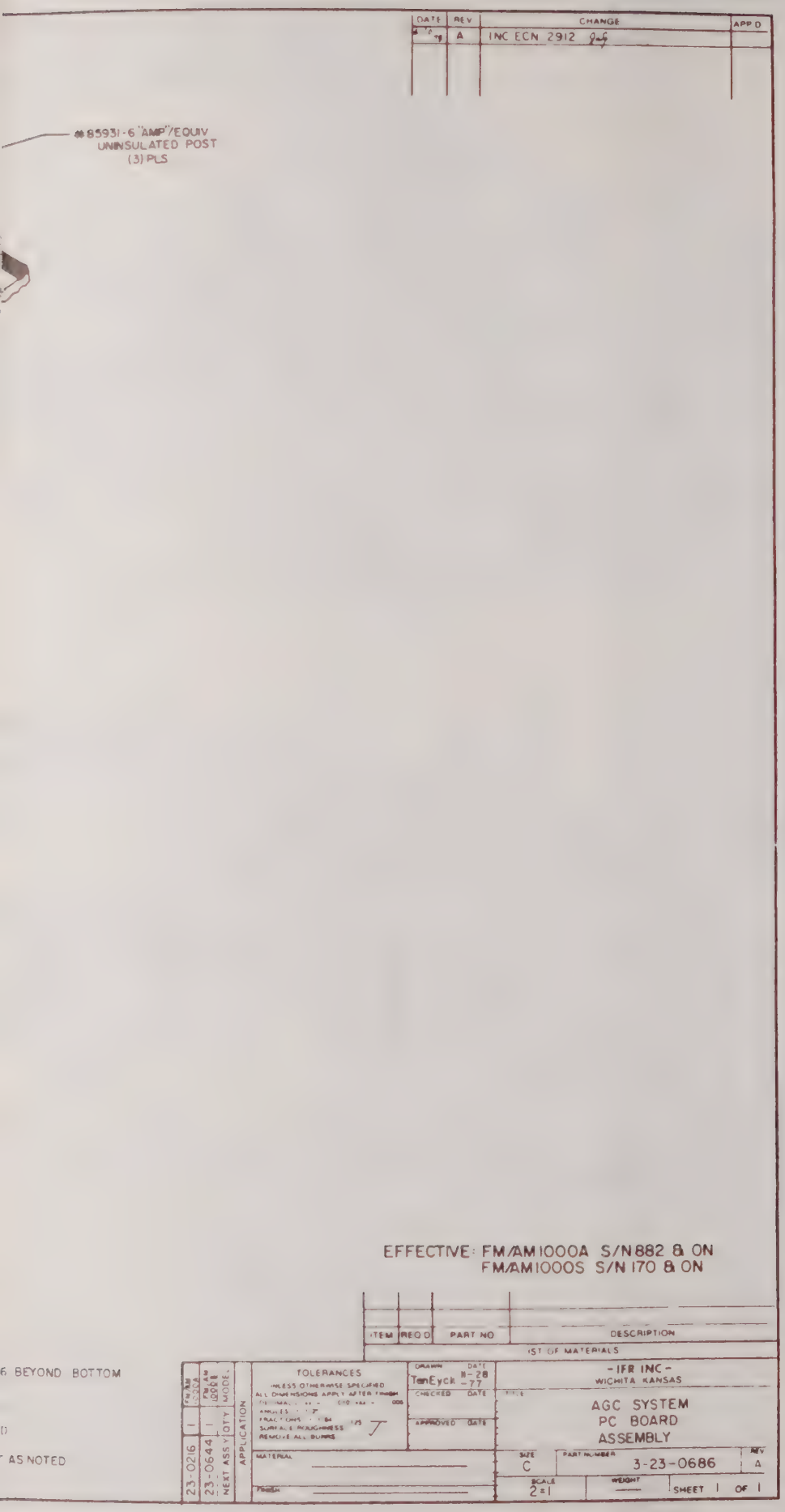
DATE
REV
CHANGE
APP'D
A
INC ECN 2912
#85931-6 "AMP"/EQUIV
UNINSULATED POST
(3) PLS
EFFECTIVE: FM/AM1000A S/N 882 & ON
FM/AM1000S S/N 170 & ON
ITEM
REQ'D
PART NO
DESCRIPTION
1ST OF MATERIALS
6 BEYOND BOTTOM
AS NOTED
23-0216
23-0644
NEXT ASSY
QTY
MODEL
APPLICATION
TOLERANCES
INLESS OTHERWISE SPECIFIED
ALL DIMENSIONS APPLY AFTER FINISH
SURFACE ROUGHNESS
REMOVE ALL BURRS
DRAWN
TenEyck
DATE
11-28
-77
CHECKED
DATE
APPROVED
DATE
MATERIAL
FINISH
-IFR INC-
WICHITA KANSAS
TITLE
AGC SYSTEM
PC BOARD
ASSEMBLY
SIZE
C
PART NUMBER
3-23-0686
REV
A
SCALE
2=1
WEIGHT
SHEET 1 OF 1

Figure 6-80

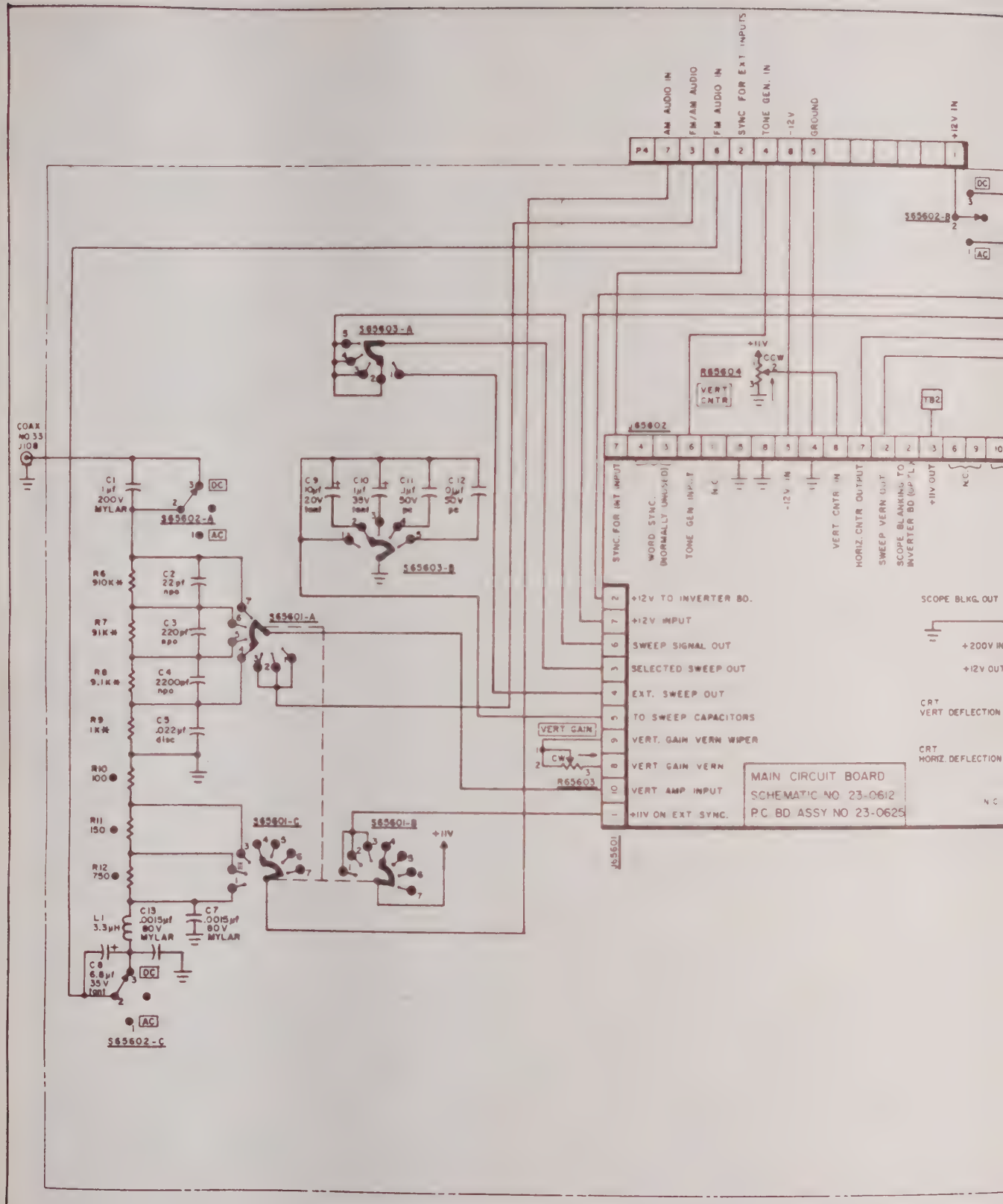
AM AUDIO IN
FM/AM AUDIO
FM AUDIO IN
SYNC FOR EXT INPUTS
TONE GEN. IN
-12 V
GROUND
+12 V IN
P4
S65602-B
DC
AC
S65603-A
+11V
CCW
R65604
VERT CNTR
TB2
J65602
COAX NO 33 J108
C1 1μf 200V MYLAR
S65602-A
C9 10μf 20V tant
C10 1μf 35V tant
C11 .1μf 50V mi
C12 .01μf 50V pc
S65603-B
R6 910K
C2 22pf npo
R7 91K
C3 220pf npo
R8 9.1K
C4 2200pf npo
R9 1K
C5 .022μf disc
R10 100
R11 150
R12 750
S65601-A
S65601-C
S65601-B
+11V
L1 3.3μH
C13 .0015μf 80V MYLAR
C7 .0015μf 80V MYLAR
C8 6.8μf 35V tant
S65602-C
VERT GAIN
CW
R65603
SYNC. FOR INT INPUT
WORD SYNC. (NORMALLY UNUSED)
TONE GEN INPUT
N.C.
-12V IN
VERT CNTR IN
HORIZ. CNTR OUTPUT
SWEEP VERN OUT
SCOPE BLANKING TO INVERTER BD (UP "L")
+11V OUT
N.C.
+12V TO INVERTER BD.
+12V INPUT
SWEEP SIGNAL OUT
SELECTED SWEEP OUT
EXT. SWEEP OUT
TO SWEEP CAPACITORS
VERT. GAIN VERN WIPER
VERT GAIN VERN
VERT AMP INPUT
+11V ON EXT SYNC.
A65601
SCOPE BLKG. OUT
+200V IN
+12V OUT
CRT VERT DEFLECTION
CRT HORIZ. DEFLECTION
N.C.
MAIN CIRCUIT BOARD
SCHEMATIC NO. 23-0612
P.C. BD ASSY NO 23-0625

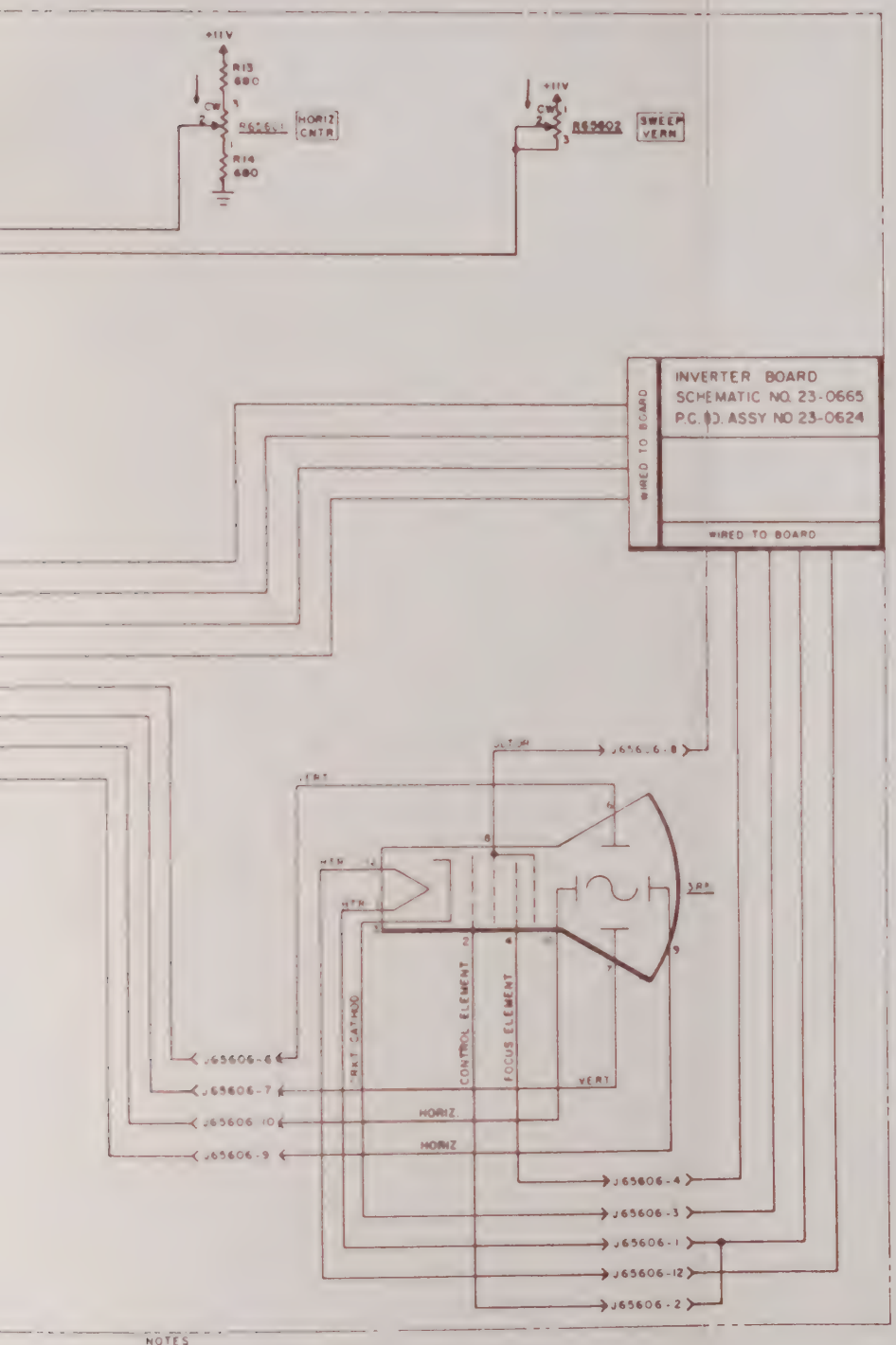

NOTES

1 TB-2 IS +11V CONSTANT TO PANEL CONTROLS.
2 ALL RESISTORS ARE 1/4W, 10% TOLERANCE EXCEPT AS NOTED.
3 # DENOTES 1/8W, 5% TOLERANCE RESISTOR
4 ● DENOTES 1/4W, 1% TOLERANCE RESISTOR

4-23-0703 SCOPE INTERCONNECT

IFR INC.

SCOPE INTERCONNECT

23-0474

D 4-23-0703

Figure 6-81

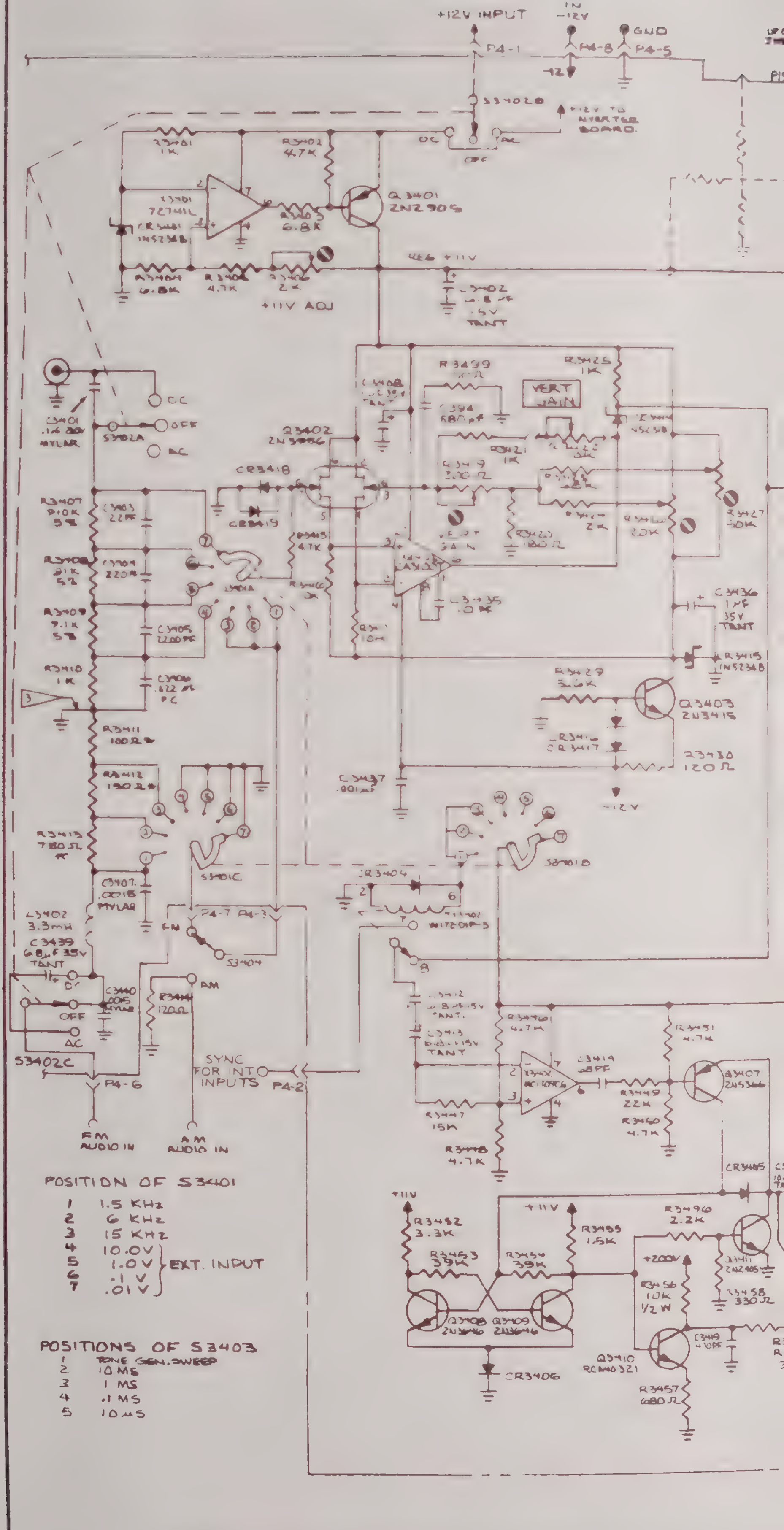
+12V INPUT
GND
P4-1
P4-8
P4-5
-12V
S3402B
+12V TO INVERTER BOARD
R3401 1K
R3402 4.7K
Q3401 2N2905
R3405 6.8K
REG +11V
R3404 6.8K
R3406 4.7K
+11V ADJ
C3402 6.8 µF 15V TANT
VERT GAIN
R3499
R3425 1K
Q3402
CR3418
CR3419
R3407 910K 5%
R3408 91K 5%
R3409 9.1K 5%
R3410 1K
R3411 100 Ω
R3412 130 Ω
R3413 750 Ω
S3402A
DC
OFF
AC
C3401 .1 µF MYLAR
C3403 22 PF
C3404 220 PF
C3405 2200 PF
C3406 .022 µF PC
C3407 .0015 MYLAR
L3402 3.3mH
C3439 68 µF 35V TANT
S3401C
S3401B
CR3404
C3437 .001 µF
C3436 1 µF 35V TANT
Q3403 2N3415
R3430 120 Ω
S3404
FM
AM
S3402C
P4-6
P4-2
SYNC FOR INTO INPUTS
FM AUDIO IN
AM AUDIO IN
R3444 120 Ω
Q3407 2N5366
R3447 15K
R3448 4.7K
R3449 22K
R3460 4.7K
R3452 3.3K
R3453 39K
R3454 39K
R3455 1.5K
+11V
+200V
R3456 10K 1/2 W
R3458 330 Ω
Q3410 RCA40321
R3457 680 Ω
CR3406
CR3405
Q3408 2N3646
Q3409 2N3646
POSITION OF S3401
1 1.5 KHz
2 6 KHz
3 15 KHz
4 10.0V
5 1.0V EXT. INPUT
6 .1 V
7 .01 V
POSITIONS OF S3403
1 TONE GEN. SWEEP
2 10 MS
3 1 MS
4 .1 MS
5 10 µS

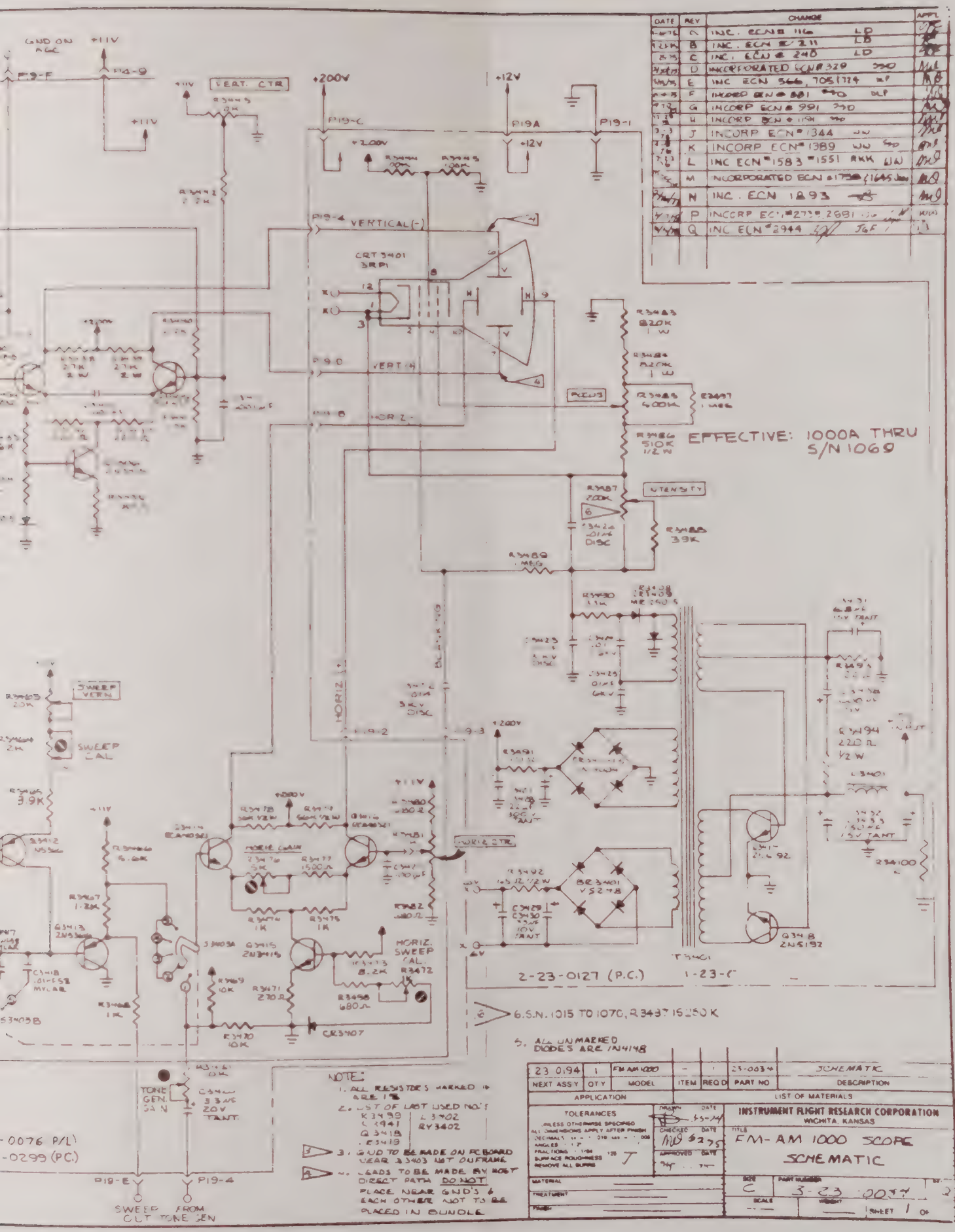

DATE | REV | CHANGE | APPL
A INC. ECN # 116 LD
B INC. ECN # 211 LD
C INC. ECN # 240 LD
D INCORPORATED ECN # 329
E INC ECN 566, 705 & 724
F INCORP ECN # 881
G INCORP ECN # 991
H INCORP ECN # 1191
J INCORP ECN # 1344
K INCORP ECN # 1389
L INC ECN # 1583 # 1551
M INCORPORATED ECN # 1738 & 1645
N INC. ECN 1893
P INCORP ECN # 2738, 2881
Q INC ECN # 2944
GND ON AGC
+11V
P19-F
P14-9
VERT. CTR
+200V
+12V
P19-C
P19A
P19-1
P19-4
VERTICAL(-)
CRT 3401 3RP1
P19-D
VERT(+)
P19-B
HORIZ(-)
FOCUS
R3483 820K 1W
R3484 820K 1W
R3485 600K
R3486 510K 1/2W
EFFECTIVE: 1000A THRU S/N 1069
INTENSITY
R3487 200K
R3488 39K
R3489 1 MEG
SWEEP VERN
SWEEP CAL
HORIZ CTR
HORIZ GAIN
HORIZ. SWEEP CAL.
R3472 1K
R3498 680Ω
R3471 270Ω
R3470 10K
CR3407
BR3401 VS248
R3492 165Ω 1/2W
R3494 220Ω 1/2W
R34100
Q3418 2N5192
T3401
2-23-0127 (P.C.)
1-23-0
6. S.N. 1015 TO 1070, R3437 15250 K
5. ALL UNMARKED DIODES ARE 1N4148
TONE GEN. GAIN
C3410 33µF 20V TANT.
P19-E
P19-4
SWEEP OUT
FROM TONE GEN
NOTE:
1. ALL RESISTORS MARKED ARE 1%
2. LIST OF LAST USED NO'S
K3499 L3402
L3941 RY3402
Q3418
R3419
3. GND TO BE MADE ON PC BOARD NEAR J3403 NOT ON FRAME
4. LEADS TO BE MADE BY HOST DIRECT PATH DO NOT PLACE NEAR GND'S & EACH OTHER NOT TO BE PLACED IN BUNDLE
23-0194 | 1 | FM AM 1000 | - | 1 | 23-0034 | SCHEMATIC
NEXT ASS'Y | QTY | MODEL | ITEM | REQ'D | PART NO | DESCRIPTION
APPLICATION | LIST OF MATERIALS
TOLERANCES
UNLESS OTHERWISE SPECIFIED ALL DIMENSIONS APPLY AFTER FINISH
DECIMALS
ANGLES
FRACTIONS
SURFACE ROUGHNESS
REMOVE ALL BURRS
DRAWN DATE
CHECKED DATE
APPROVED DATE
MATERIAL
TREATMENT
FINISH
INSTRUMENT FLIGHT RESEARCH CORPORATION
WICHITA, KANSAS
TITLE
FM-AM 1000 SCOPE
SCHEMATIC
SIZE C
PART NUMBER 3-23-0034
SCALE
WEIGHT
SHEET 1 OF

Figure 6-82

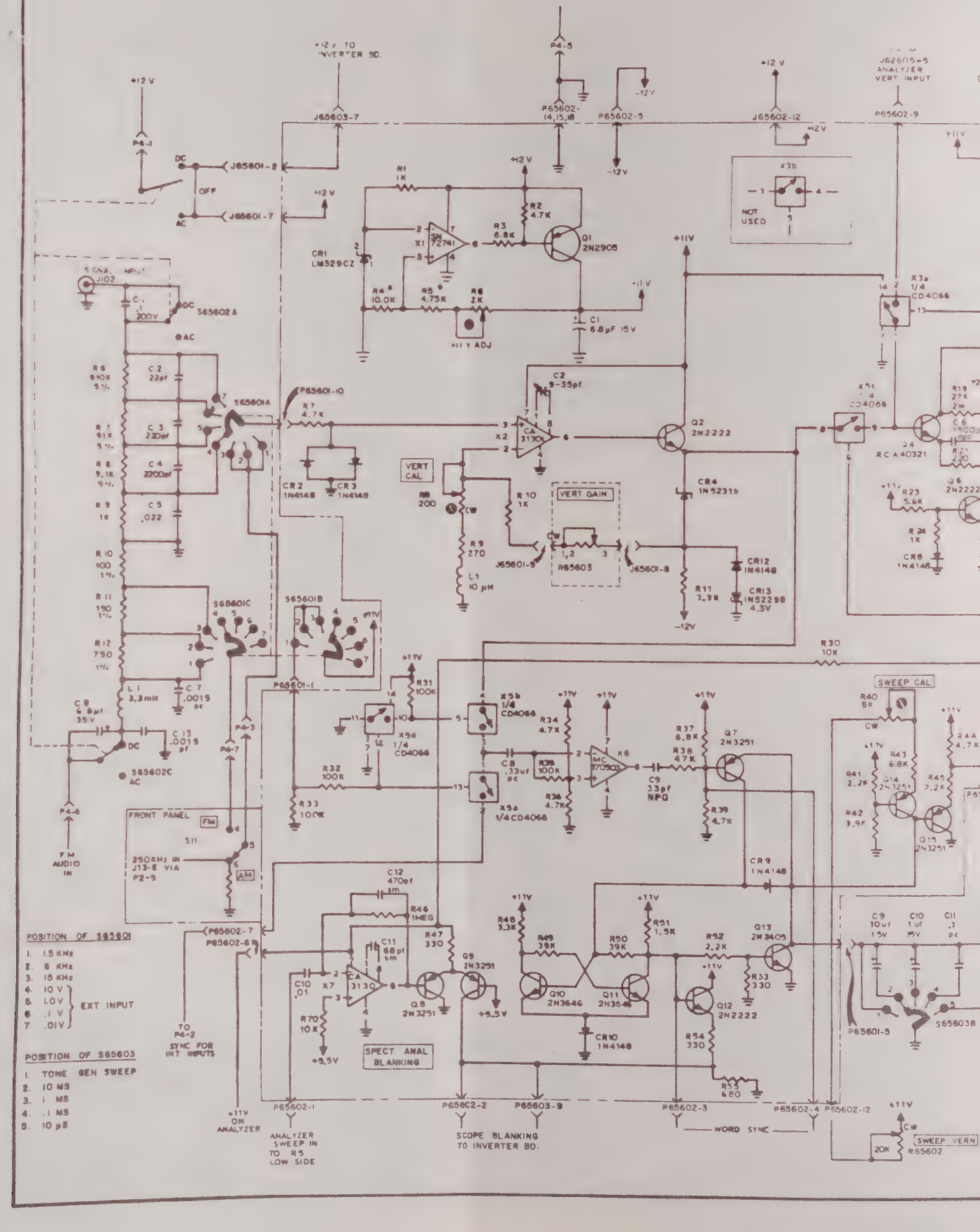

+12 V TO INVERTER BD.
J65603-7
P4-5
P65602-14,15,18
P65602-5
J65602-12
J62605-5 ANALYZER VERT INPUT
P65602-9
+12 V
P4-1
DC
OFF
AC
J65601-2
J65601-7
R1 1K
R2 4.7K
R3 6.8K
Q1 2N2905
X1 SN 72741
CR1 LM329CZ
R4 10.0K
R5 4.75K
R6 2K
+11 V ADJ
C1 6.8µF 15V
+11V
X3b
NOT USED
X3a 1/4 CD4066
SIGNAL INPUT J102
C1 .1 200V
S65602A
R6 910K 5%
C2 22pf
R7 91K 5%
C3 220pf
R8 9.1K 5%
C4 2200pf
R9 1K
C5 .022
R10 100 1%
R11 150 1%
R12 750 1%
S65601A
P65601-10
R7 4.7K
CR2 1N4148
CR3 1N4148
C2 9-35pf
X2 CA 3130
Q2 2N2222
VERT CAL
R8 200
R10 1K
VERT GAIN
R9 270
L1 10 µH
J65601-9
R65603
J65601-8
CR4 1N5231b
CR12 1N4148
CR13 1N5229B 4.3V
R11 3.3K
-12V
X5c 1/4 CD4066
R19 27K 2W
C6 1500pf
Q4 RCA 40321
R21 220
R23 5.6K
Q6 2N2222
R24 1K
CR8 1N4148
S65601C
S65601B
P65601-1
R30 10K
R31 100K
X5b 1/4 CD4066
X5d 1/4 CD4066
R34 4.7K
R35 100K
R36 4.7K
X6 MC 1709CG
C8 .33uf pc
C9 33pf NPO
R37 6.8K
R38 47K
Q7 2N3251
R39 4.7K
X5a 1/4 CD4066
R32 100K
R33 100K
SWEEP CAL
R40 5K
R41 2.2K
R42 3.9K
R43 6.8K
Q14 2N3251
R45 2.2K
Q15 2N3251
R44 4.7K
C8 6.8µf 35V
C13 .0015 pf
S65602C
P4-6
FM AUDIO IN
P4-3
P4-7
FRONT PANEL
FM
S11
250KHz IN J13-E VIA P2-5
AM
C12 470pf sm
R46 1MEG
C11 68pf sm
R47 330
Q9 2N3251
Q8 2N3251
C10 .01
X7 CA 3130
R70 10K
+5.5V
SPECT. ANAL BLANKING
R48 3.3K
R49 39K
R50 39K
R51 1.5K
R52 2.2K
Q13 2N2405
R33 330
Q10 2N3646
Q11 2N3646
Q12 2N2222
CR10 1N4148
R54 330
R55 680
C9 10uf 15V
C10 1uf 15V
C11 .1 pc
P65601-5
S65603B
P65602-7
P65602-6
TO P4-2 SYNC FOR INT INPUTS
+11V ON ANALYZER
P65602-1
ANALYZER SWEEP IN TO R5 LOW SIDE
P65602-2
P65603-9
SCOPE BLANKING TO INVERTER BD.
P65602-3
P65602-4
P65602-12
WORD SYNC
SWEEP VERN
R65602
20K
POSITION OF S65601
1. 1.5 KHz
2. 6 KHz
3. 15 KHz
4. 10 V
5. 1.0 V
6. .1 V
7. .01V
EXT INPUT
POSITION OF S65603
1. TONE GEN SWEEP
2. 10 MS
3. 1 MS
4. .1 MS
5. 10 µS

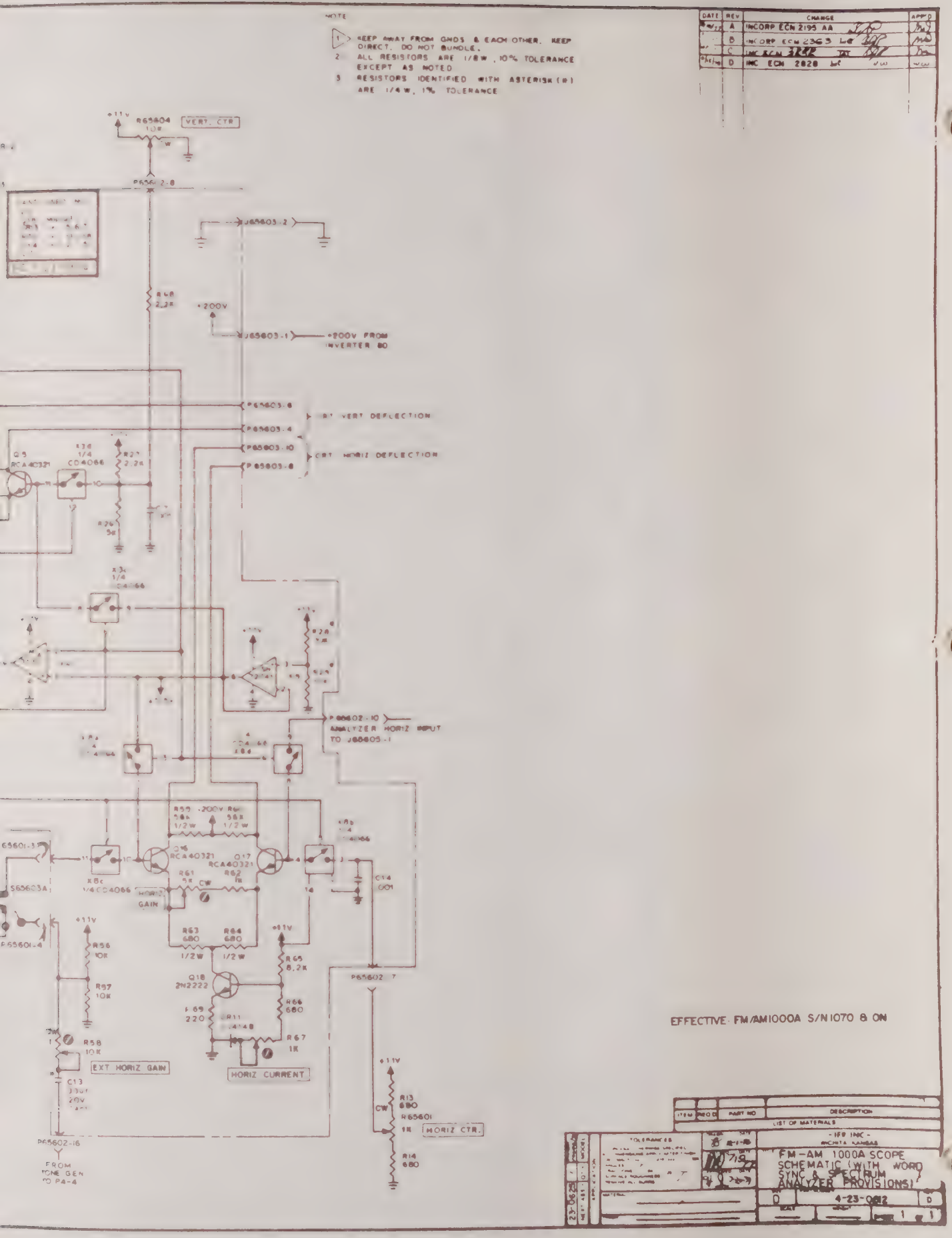
NOTE
1 KEEP AWAY FROM GNDS & EACH OTHER. KEEP DIRECT. DO NOT BUNDLE.
2 ALL RESISTORS ARE 1/8W, 10% TOLERANCE EXCEPT AS NOTED
3 RESISTORS IDENTIFIED WITH ASTERISK (*) ARE 1/4W, 1% TOLERANCE
DATE REV CHANGE APP'D
A INCORP ECN 2195 AA
B INCORP ECN 2363
C INC ECN 3222
D INC ECN 2828
VERT. CTR
+200V
+200V FROM INVERTER BD
CRT VERT DEFLECTION
CRT HORIZ DEFLECTION
ANALYZER HORIZ INPUT TO J65605-1
HORIZ GAIN
EXT HORIZ GAIN
HORIZ CURRENT
HORIZ CTR.
FROM TONE GEN TO P4-4
EFFECTIVE FM/AM1000A S/N1070 & ON
LIST OF MATERIALS
FM-AM 1000A SCOPE SCHEMATIC (WITH WORD SYNC & SPECTRUM ANALYZER PROVISIONS)
4-23-0812

Figure 6-83

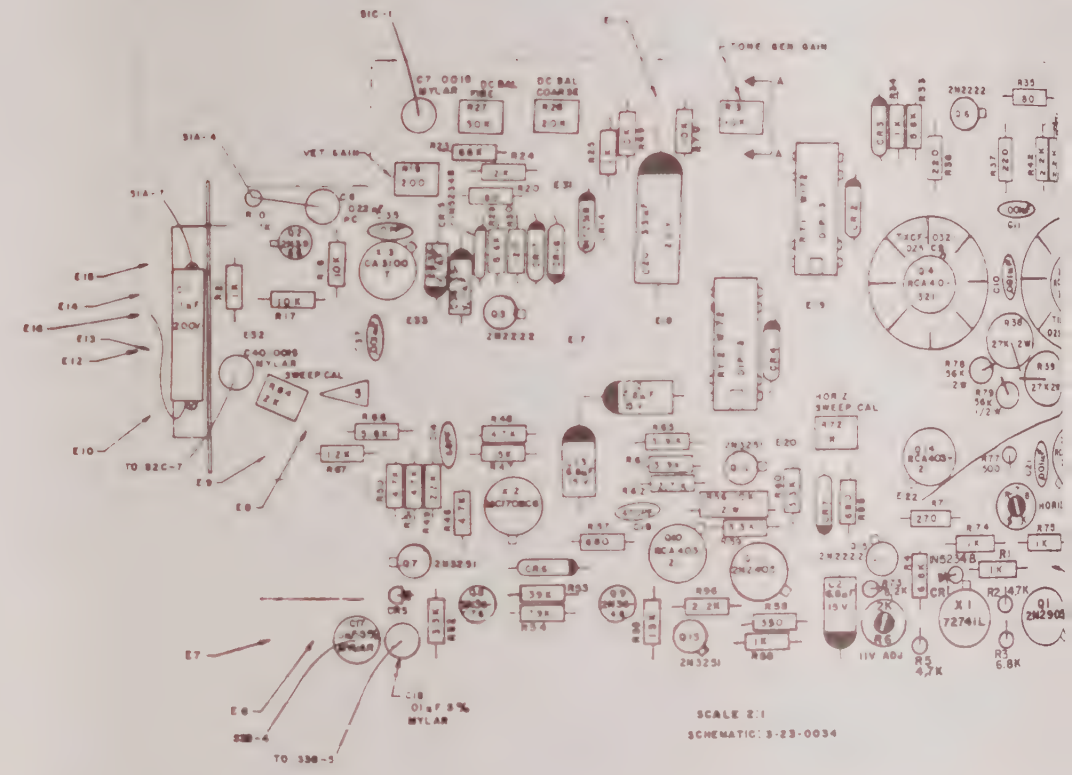

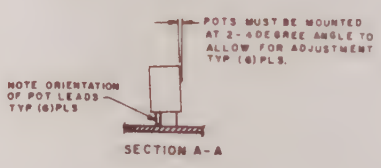

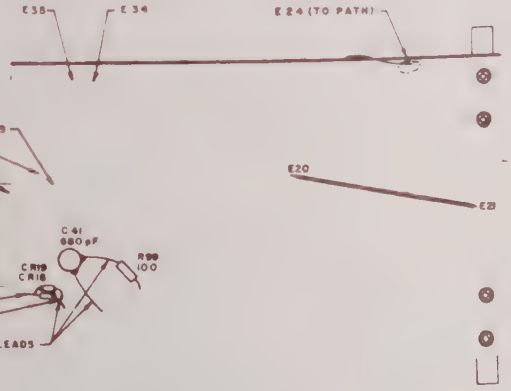

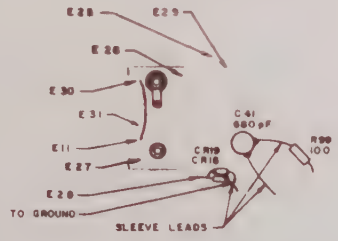

9. ALL UNMARKED DIODES ARE IN1418.
8. ALL COMPONENT LEADS CONNECTING TO SWITCH TERMINALS ARE SLEEVED.
7. SWITCH(3) CONSISTS OF ONE WAFER (B) IS ON TOP HALF, (A) IS ON BOTTOM HALF. (SEE SWITCH DETAIL SHT. 2 OF 2)
6. SWITCH(1) CONSISTS OF TWO WAFERS, (A,B,C). (C) IS LOCATED ON FRONT OF FIRST WAFER. (B) IS ON BACKSIDE OF FIRST WAFER. (A) IS LOCATED ON SECOND WAFER.
5. TURN R64 POT AS SHOWN TO ALLOW FOR ADJUSTMENT.
4. REMOVE ALL UNUSED TERMINALS ON SWITCHES AND POTS.
3. ALL RESISTORS ARE 1/4 W, 10% TOL. EXCEPT AS NOTED.
2. ALL CAPACITORS ARE IN μf EXCEPT AS NOTED.
1. COMPONENT LEADS MAY EXTEND .04 TO .06 BEYOND BOTTOM OF BOARD AFTER SOLDERING.

NOTES:

2-4-78 Y ORIGINAL RELEASE JRJ

WIRE LIST

TO	FROM	COLOR	AWG	LENGTH	REMARKS
E1	S3A-1	WHT	26	5.0	
E2	R43-2	WHT/YLO	26	12.5	VERT CTR, LEAVE FREE
E3	R81-2	WHT/BLU	26	11	HORIZ CTR, LEAVE FREE
E4	E10	RED	22	7.0	
E5	R63-1	WHT/RED	26	10	VERT CTR, LEAVE FREE +11V
E6	S3B-3	C18	—	—	1µF 35V TANT POS TOWARD BD
E7	S3B-2	C18	—	—	10µF 15V TANT " " "
E8	S1B-COM	WHT/RED	26	7	
E9	R63-2	BRWN/WHT	26	2.5	
E10	[illegible]	BLK	22	6.5	
E12	S2A-2	RED	22	1.5	
E13	P4-1	RED	22	11.5	
E14	S2A-1	RED	22	1.5	
E15	S2B	[illegible]	22	1.5	
E16	S2B-2	YEL	22	1.5	
E17	S1B-1,2,3	GREY	26	4	S1B-1,2,3 CONNECTED IN SERIES
E18	P4-4	WHT/ORG	26	6.2	
E19	P4-2	GRN	26	6.5	
E20	[illegible]	BLK	26	2.2	SLEEVE
E22	E23	BLK	26	1.0	SLEEVE
GRND	R41-1	BLK	26	[illegible]	VERT CTR, LEAVE FREE
E24	P4-9	RED/WHT	26	5.0	SYNC FOR INT INPUTS
E25	S3A-5,4,3	WHT/GRY	26	2.4	S3A-5,4,3,2 CONNECTED IN SERIES
E26	S3-COM	YEL/WHT	26	3.0	
E27	S1A-[illegible]	BLK	26	4	SLEEVE
E28	S1A-COM	[illegible]	—	—	[illegible]
E29	R63-[illegible]	RED/WHT	26	5	
E31	S1A-[illegible]	[illegible]	—	—	[illegible]µF 200V MYLAR
E32	R22-1	YEL	26	2.7	
E33	R22-2	GRN/WHT	26	2.7	
E34	S3B-5	[illegible]	—	—	[illegible]µF 5% MYLAR
E35	S1B-4	[illegible]	—	—	[illegible]µF [illegible] MYLAR
P4-3	S1A-[illegible]	BLK	26	6.5	S1A-1,2,3 CONNECTED IN SERIES
P4-5	GRND	BLK	26	6.5	
P4-6	S2C-2	GRY	26	12.5	
P4-7	S1C-COM	YLO	26	3.0	
P4-8	E32	YEL	26	10.5	
GRND	S[illegible]	[illegible]	—	—	.0015µF MYLAR
[illegible]	[illegible]-2	R13	—	—	[illegible] %
[illegible]	[illegible]	R12	—	—	50Ω [illegible] %
[illegible]	[illegible]	[illegible]	—	—	[illegible] %
GRND	[illegible]	[illegible]	26	4	S1C-7,6,5,4, ARE CONNECTED IN SERIES
S1C-[illegible]	S2C-1	[illegible]	—	—	3.3µH
S2C-1	GRND	C40	—	—	.0015µF MYLAR
S2C-1	S2C-3	C39	—	—	6.8µF 35V POS TOWARD S2C-1
S2C-3	S2C-2	—	26	2	
S1A-3	[illegible]	RED	22	5	
GRND	S1A-4	R6,R10	—	—	.022µF PC-1K
S1A-4	S1A-5	R9,[illegible]	—	—	[illegible] 5%, 2200PF
S1A-5	S1A-6	R8,C4	—	—	51K 5%, 220PF
S1A-6	S1A-7	R7,C3	—	—	510K 5%, 22PF
GRND	S3-GRND	—	—	—	

6

*

4 VERTICAL

7 BLANKING

HORIZ +

TRNC

EFFECTIVE: FM/AM1000A thru S/N1069

SEE SHT. 2

JRJ 2/6/78

SCOPE

PC BOARD ASS'Y.

D 4-23-0076 Y

Figure 6-84

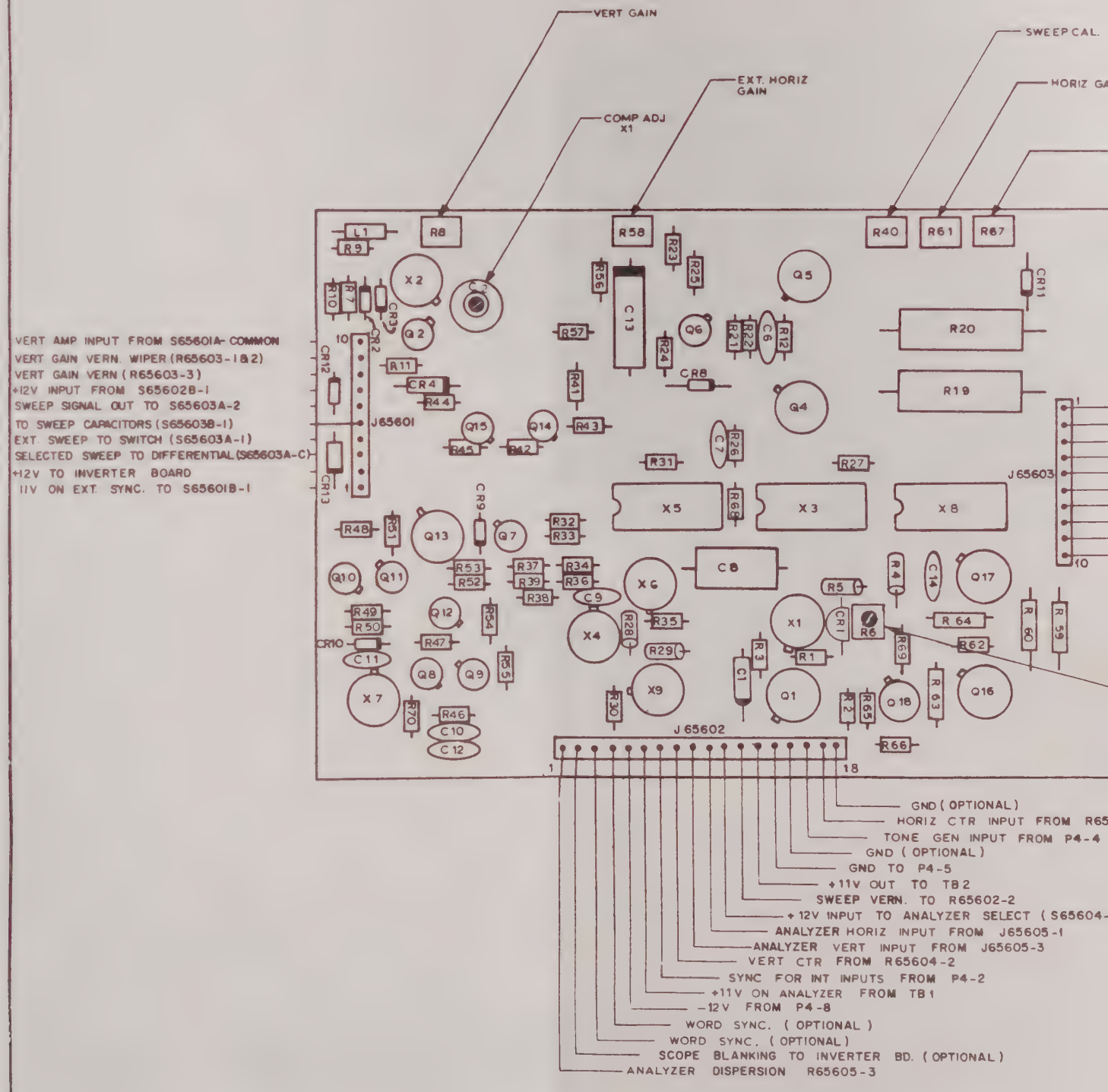
VERT GAIN
EXT. HORIZ GAIN
COMP ADJ X1
SWEEP CAL.
HORIZ GA
VERT AMP INPUT FROM S65601A- COMMON
VERT GAIN VERN. WIPER (R65603-1&2)
VERT GAIN VERN (R65603-3)
+12V INPUT FROM S65602B-1
SWEEP SIGNAL OUT TO S65603A-2
TO SWEEP CAPACITORS (S656038-1)
EXT. SWEEP TO SWITCH (S65603A-1)
SELECTED SWEEP TO DIFFERENTIAL (S65603A-C)
+12V TO INVERTER BOARD
11V ON EXT. SYNC. TO S65601B-1
J65601
J65603
J65602
GND (OPTIONAL)
HORIZ CTR INPUT FROM R65
TONE GEN INPUT FROM P4-4
GND (OPTIONAL)
GND TO P4-5
+11V OUT TO TB2
SWEEP VERN. TO R65602-2
+12V INPUT TO ANALYZER SELECT (S65604-
ANALYZER HORIZ INPUT FROM J65605-1
ANALYZER VERT INPUT FROM J65605-3
VERT CTR FROM R65604-2
SYNC FOR INT INPUTS FROM P4-2
+11V ON ANALYZER FROM TB1
-12V FROM P4-8
WORD SYNC. (OPTIONAL)
WORD SYNC. (OPTIONAL)
SCOPE BLANKING TO INVERTER BD. (OPTIONAL)
ANALYZER DISPERSION R65605-3

DATE	REV	CHANGE	APP'D

IZ CURRENT

+ 200V FROM INVERTER BD
GND (TO INVERTER BD)
N C
CRT PIN 7 (J65606-7) VERT DEFLECTION
NC
CRT PIN 6 (J65606-6) VERT DEFLECTION
+12V (TO INVERTER BD)
CRT PIN 9 (J65606-9) HORIZ DEFLECTION
ANALYZER SWEEP & SCOPE BLANKING OUT TO INVERTER BD
CRT PIN 10 (J65606-10) HORIZ DEFLECTION

EFFECTIVE: FM/AM1000A S/N 1070 & ON

ITEM	REQ'D	PART NO	DESCRIPTION

LIST OF MATERIALS

TOLERANCES
SURFACE ROUGHNESS
REMOVE ALL BURRS

DRAWN DATE
CHECKED DATE
APPROVED DATE

- IFR INC -
WICHITA KANSAS

TITLE SCOPE MAIN BOARD ASS'Y DWG

MATERIAL
FINISH

SIZE C | PART NUMBER 3-23-0625 | REV
SCALE | WEIGHT | SHEET 2 OF 2

NEXT ASSY | QTY | MODEL | APPLICATION

Figure 6-85

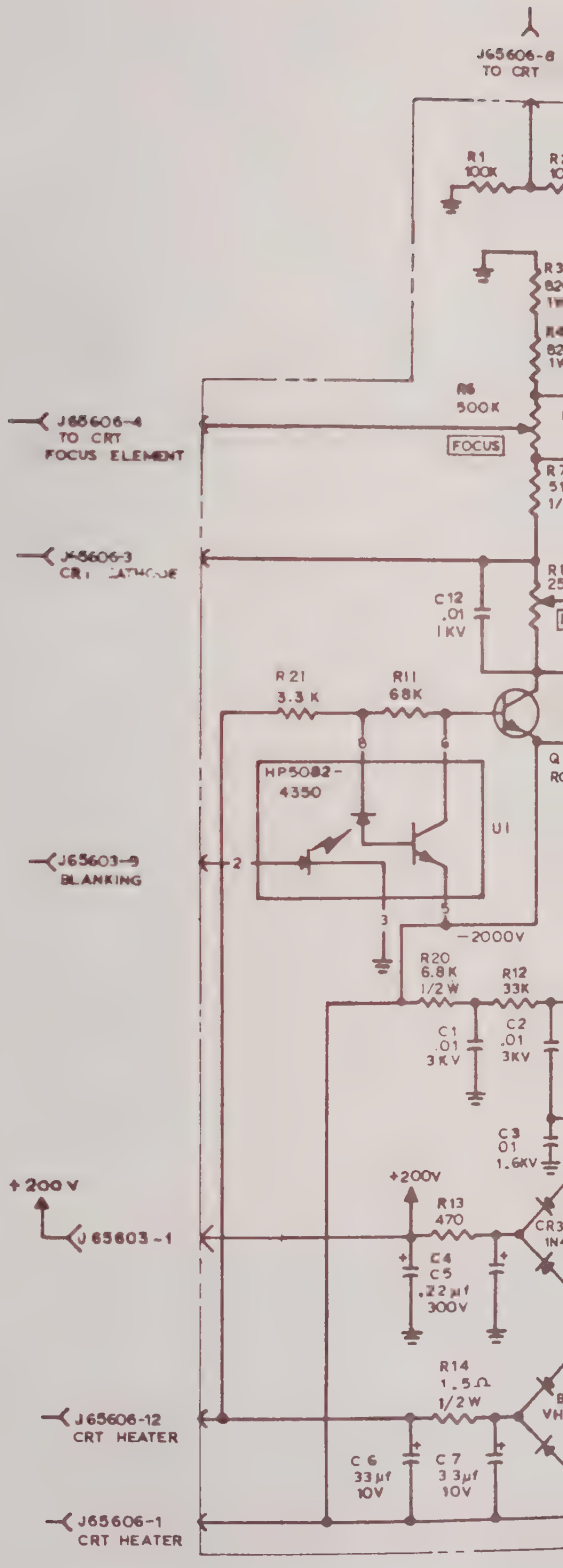
J65606-8
TO CRT
R1
100K
R3
82
1W
R4
82
1W
R6
500K
FOCUS
J65606-4
TO CRT
FOCUS ELEMENT
J65606-3
CR1 CATHODE
C12
.01
1KV
R21
3.3 K
R11
68K
HP5082-
4350
U1
J65603-9
BLANKING
2
3
5
-2000V
R20
6.8K
1/2W
R12
33K
C1
.01
3KV
C2
.01
3KV
C3
01
1.6KV
+200V
+200V
J65603-1
R13
470
C4
C5
.22μf
300V
R14
1.5Ω
1/2W
J65606-12
CRT HEATER
C6
33μf
10V
C7
33μf
10V
J65606-1
CRT HEATER

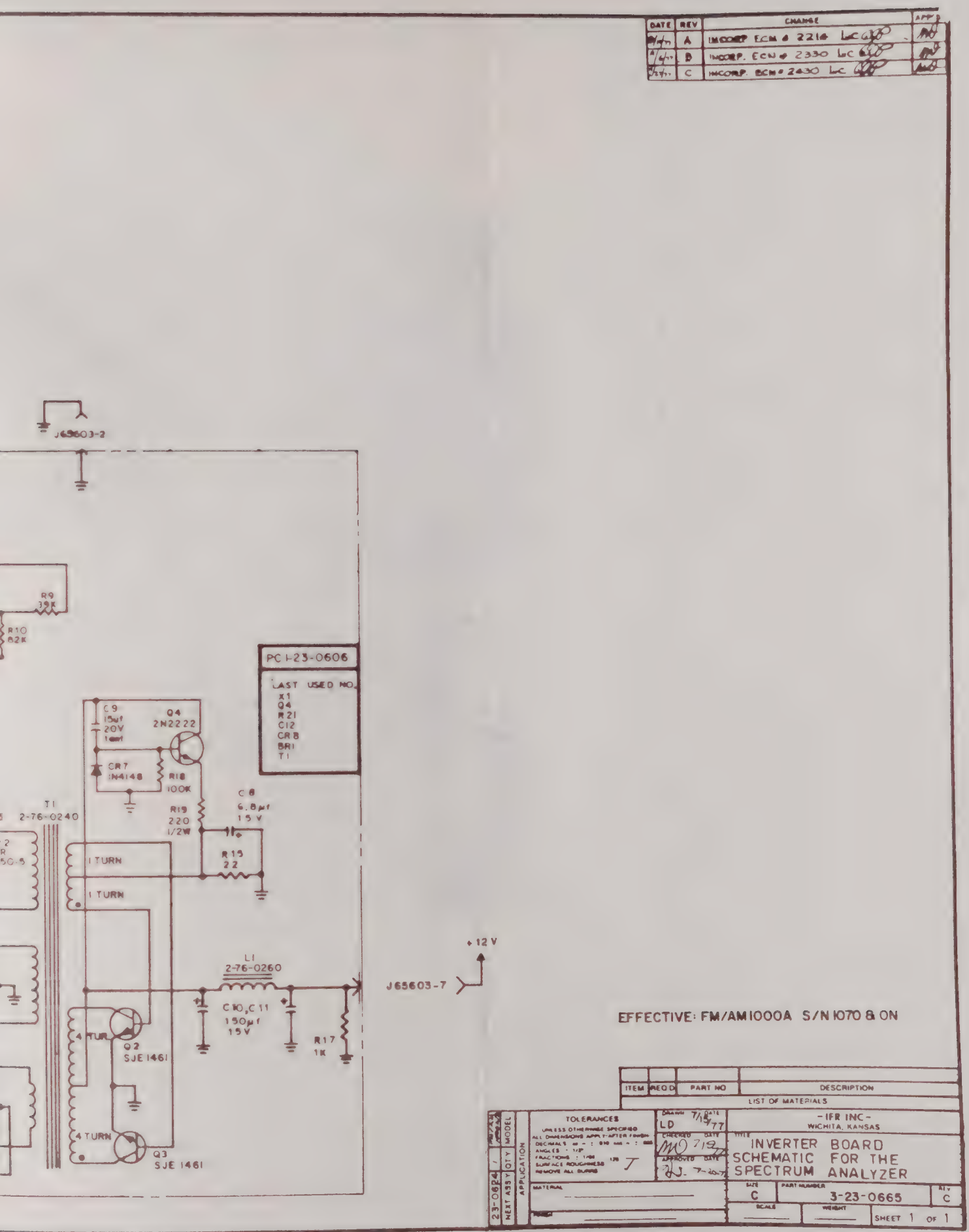
DATE
REV
CHANGE
APP'D
A
INCORP ECN # 2216 LtC
B
INCORP. ECN # 2330 LtC
C
INCORP. ECN # 2430 LtC
J65603-2
R9
33K
R10
82K
PC 1-23-0606
LAST USED NO.
X1
Q4
R21
C12
CR8
BR1
T1
C9
15µf
20V
Tant
Q4
2N2222
CR7
IN4148
R18
100K
C8
6.8µf
15V
R19
220
1/2W
R15
22
T1
2-76-0240
1 TURN
1 TURN
+12V
J65603-7
L1
2-76-0260
C10, C11
150µf
15V
R17
1K
4 TURN
Q2
SJE1461
4 TURN
Q3
SJE 1461
EFFECTIVE: FM/AM1000A S/N 1070 & ON
ITEM
REQ'D
PART NO
DESCRIPTION
LIST OF MATERIALS
TOLERANCES
UNLESS OTHERWISE SPECIFIED
ALL DIMENSIONS APPLY AFTER FINISH
DECIMALS .XX ± .010 .XXX ± .005
ANGLES ± 1/2°
FRACTIONS ± 1/64
SURFACE ROUGHNESS 125
REMOVE ALL BURRS
DRAWN LD 7/19/77
CHECKED MD 7/19
APPROVED JL 7-20-77
- IFR INC -
WICHITA, KANSAS
TITLE
INVERTER BOARD
SCHEMATIC FOR THE
SPECTRUM ANALYZER
MATERIAL
SIZE C
PART NUMBER 3-23-0665
REV C
SCALE
WEIGHT
SHEET 1 OF 1
NEXT ASSY
QTY
MODEL
APPLICATION
23-0824

Figure 6-86

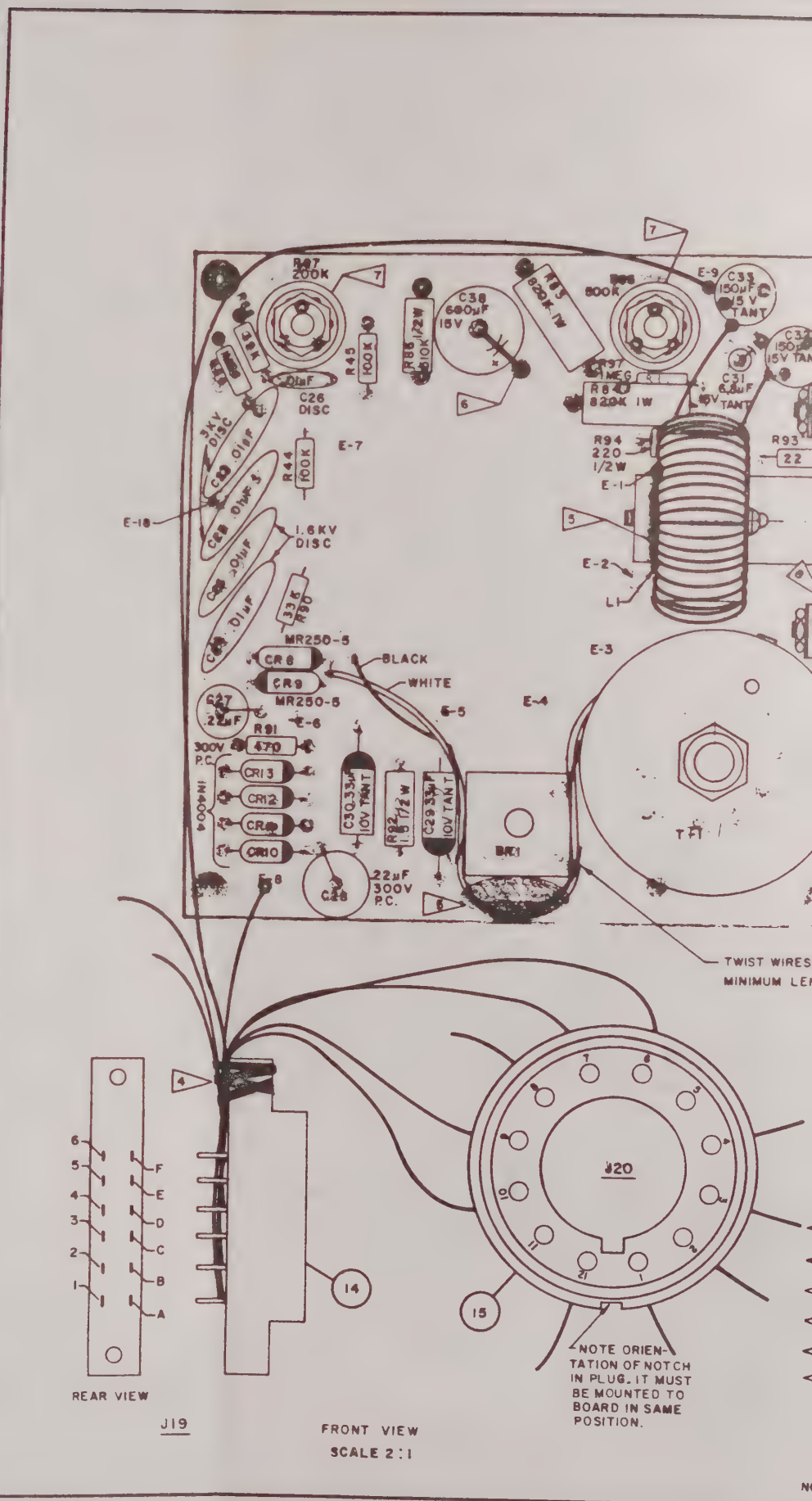

R97 200K
R45 100K
C26 DISC
C38 680µF 15V
R86 810K 1/2W
R83 820K 1W
R96 500K
E-9
C33 150µF 15V TANT
C32 150µF 15V TANT
C31 6.8µF 15V TANT
R97 1MEG
R8 820K 1W
R94 220 1/2W
R93 22
E-1
E-2
L1
E-7
R44 100K
3KV DISC
E-18
1.6KV DISC
33K R90
MR250-5
CR8
CR9
BLACK
WHITE
E-3
E-4
E-5
E-6
C27 .22µF
R91 470
300V P.C.
CR13
CR12
CR10
1N4004
C30 33µF 10V TANT
R92 1.5 1/2W
C29 33µF 10V TANT
BR1
TF1
C28 22µF 300V P.C.
TWIST WIRES
MINIMUM LE
J20
14
15
NOTE ORIENTATION OF NOTCH IN PLUG. IT MUST BE MOUNTED TO BOARD IN SAME POSITION.
REAR VIEW
J19
FRONT VIEW
SCALE 2:1

DATE	REV	CHANGE	APP'D
2-28-78	R	ORIGINAL RELEASE JAJ	

SCHEMATIC NO. 3-23-0034

REAR VIEW

WIRE LIST

TO	FROM	AWG	LENGTH	COLOR	REMARKS
E-1	J20-4	26	2.5	YELLOW	
E-2	J20-3	26	2.5	GRN/WHT	
E-3	J20-2	26	2.5	GRY/WHT	
E-4	J20-1	26	2.5	GREEN	
E-5	J20-12	26	2.5	BROWN	
E-6	J19-C	26	5.5	ORG/WHT	+200V
E-7	J20-8	26	2.5	ORANGE	
E-8	J19-1	22	4.0	BLACK	GROUND
E-9	J19-A	22	10.0	RED	+12V
E-10	E-14	26	0.7	BUSS	SLEEVE
E-11	E-15	26	2.4	BUSS	SLEEVE
E-12	E-16	26	2.4	BUSS	SLEEVE
E-13	E-17	26	1.1	BUSS	SLEEVE
E-18	J19-3	26	6.0	ORANGE	BLANKING
J20-6	J19-4	26	6.5	VIO/WHT	VERT −
J20-7	J19-D	26	6.5	VIOLET	VERT +
J20-9	J19-2	26	6.5	BLUE	HORIZ. +
J20-10	J19-B	26	6.5	WHITE	HORIZ. −

PPLY SILICONE GREASE BETWEEN TRANSISTORS AND MTG. BRKT.

OT ASSEMBLYS R87 AND R85 MUST BE MOUNTED 90° TO BOARD.

LEEVE POSITIVE LEAD OF C38

PPLY RTV TO SHADED AREAS.

ECURE WIRES TO END OF PLUG,(J19), WITH TIE-WRAP.

PPLY EVEN COATING OF 1A76 "HUMISEAL"/EQUIV. TO BOTTOM
F BOARD AFTER ASS'Y

OMPONENT LEADS MAY EXTEND .04 TO .06 BEYOND
OTTOM OF BOARD AFTER SOLDERING.

LL RESISTORS ARE 1/4 W, 10% TOL. EXCEPT AS NOTED.

EFFECTIVE: FM/AM1000A thru S/N 1069

SEE SHEET 2

ITEM	REQ'D	PART NO	DESCRIPTION

LIST OF MATERIALS

TOLERANCES
UNLESS OTHERWISE SPECIFIED
ALL DIMENSIONS APPLY AFTER FINISH
DECIMALS ± .010 .005 ± .005
ANGLES ± 1/2°
FRACTIONS ± 1/64
SURFACE ROUGHNESS 125
REMOVE ALL BURRS

DRAWN JAJ DATE 2-28-78
CHECKED DATE
APPROVED DATE

-IFR INC-
WICHITA, KANSAS

TITLE
SCOPE INVERTER
PC BOARD ASS'Y.

SIZE C | PART NUMBER 3-23-0130 | REV R
SCALE 1:1 | WEIGHT | SHEET 1 OF 2

MATERIAL
FINISH

NEXT ASSY | QTY | MODEL
APPLICATION

Figure 6-87

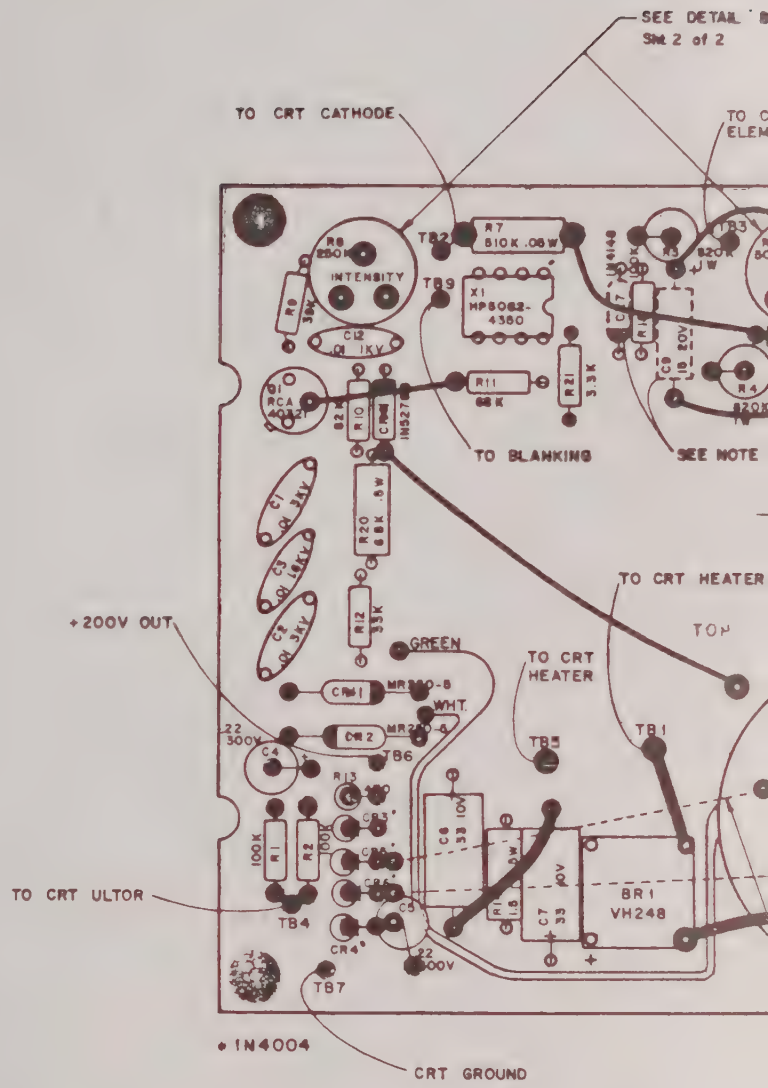
SEE DETAIL
Sht 2 of 2
TO CRT CATHODE
TO BLANKING
SEE NOTE
TO CRT HEATER
TOP
+200V OUT
GREEN
WHT.
TO CRT HEATER
TO CRT ULTOR
CRT GROUND
* 1N4004
INTENSITY
BR1
VH248

DATE	REV	CHANGE	APPD
[illegible]	D	REVISED & REDRAWN LC	[illegible]
[illegible]	E	INCORP. ECN # 2389	[illegible]
[illegible]	F	INCORP. ECN # 2430 LC	[illegible]
[illegible]	G	INCORP ECN # 2468 LC	[illegible]
[illegible]	H	INCORP ECN # 2498 & 2525 LC	[illegible]
[illegible]	J-1	INC. ECN # 2727 A.A.	WW
[illegible]	J-2	INC. ECN 2888	WW

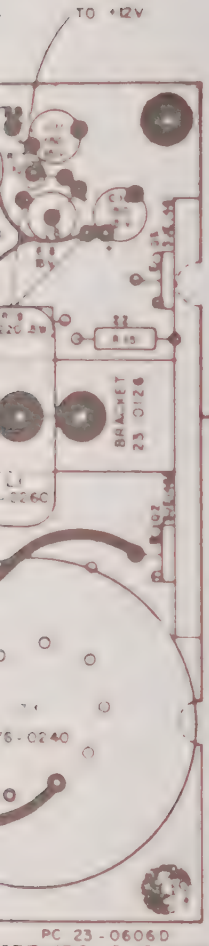

PC 23-0606D
SCHEMATIC 3-23-0665

INSTALL JUMPERS ON BACK OF PC BD AS SHOWN

NOTES:

1. ALL RESISTORS ARE 1/4 W., 10% TOLERANCE EXCEPT AS NOTED.
2. ALL CAPACITOR VALUES ARE IN pF EXCEPT AS NOTED.
3. COMPONENT LEADS MAY EXTEND .04 TO .06 BEYOND BOTTOM OF BOARD AFTER SOLDERING.
4. REFER TO SHEET 2 OF 2 FOR PLUG WIRING & DETAIL INFORMATION
5. ALL RESISTOR VALUES ARE IN Ω EXCEPT AS NOTED.
6. BOTTOM OF BOARD TO BE COATED WITH "HUMISEAL" / EQUIV. TYPE 1A76 LIQUID INSULATION
7. PLACE COMPONENT FLAT ON BACK SIDE OF PC. BOARD.

EFFECTIVE FM/AM1000A S/N 1070 & ON

ITEM	REQ'D	PART NO.	DESCRIPTION

LIST OF MATERIALS

23-0626	1	NEXT ASSY	QTY
		MODEL	
		APPLICATION	

TOLERANCES
UNLESS OTHERWISE SPECIFIED
ALL DIMENSIONS APPLY AFTER FINISH
DECIMALS .XX ± .010 .XXX ± .005
ANGLES ± 1/2°
FRACTIONS ± 1/64
SURFACE ROUGHNESS 125
REMOVE ALL BURRS

DRAWN LC DATE 8/31/77
CHECKED DATE [illegible]
APPROVED DATE [illegible] 9/2/77

MATERIAL See L/M
FINISH

-IFR INC-
WICHITA, KANSAS

TITLE
SPECT. ANAL. INVERTER
PC BOARD ASSY.
FM/AM-1000 S

SIZE C | PART NUMBER 3-23-0624 | REV
SCALE 2 X | WEIGHT | SHEET 1 OF 2

Figure 6-88

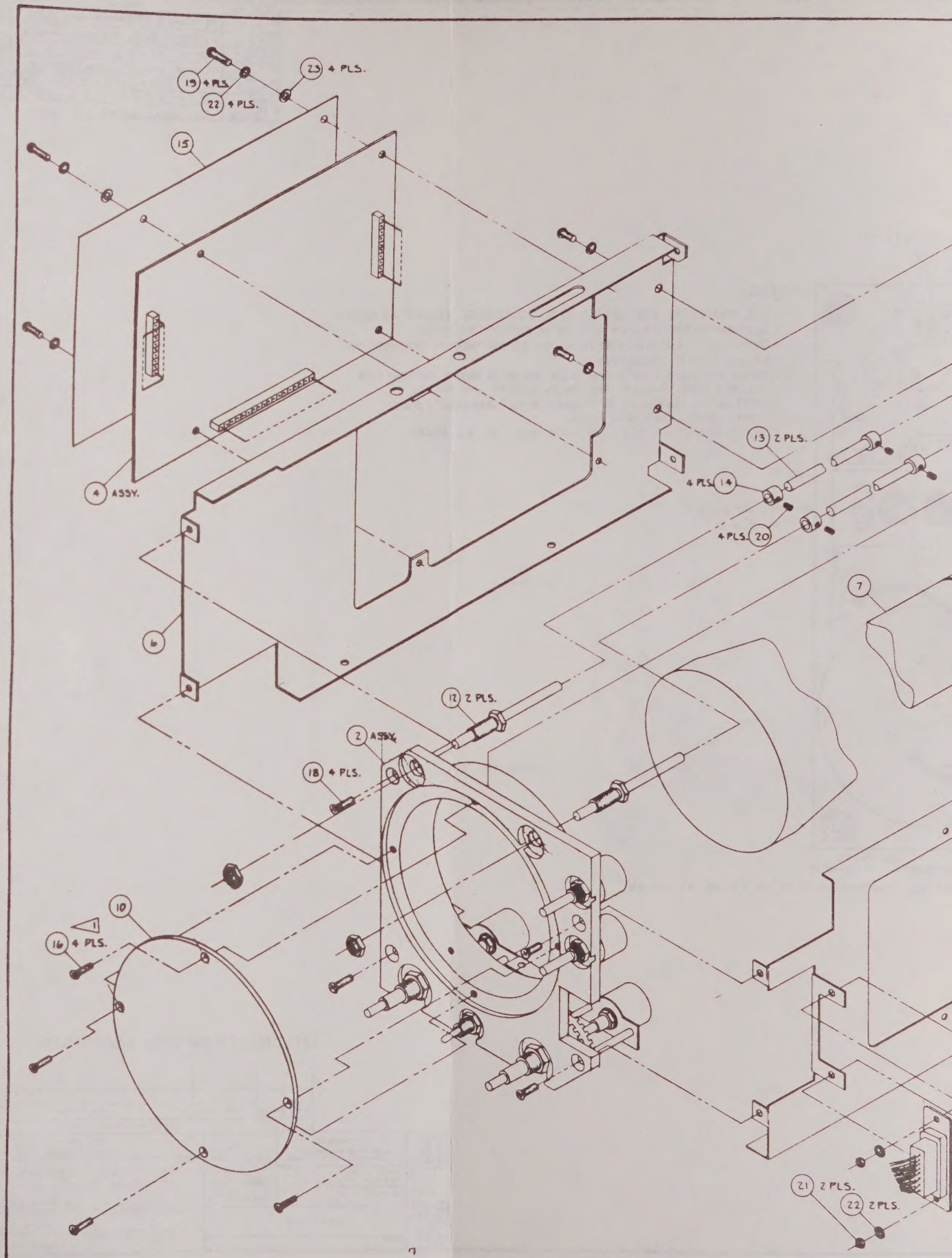
23 4 PLS.
19 4 PLS.
22 4 PLS.
15
4 ASSY.
13 2 PLS.
4 PLS. 14
4 PLS. 20
7
6
12 2 PLS.
2 ASSY.
18 4 PLS.
10
1
16 4 PLS.
21 2 PLS.
22 2 PLS.

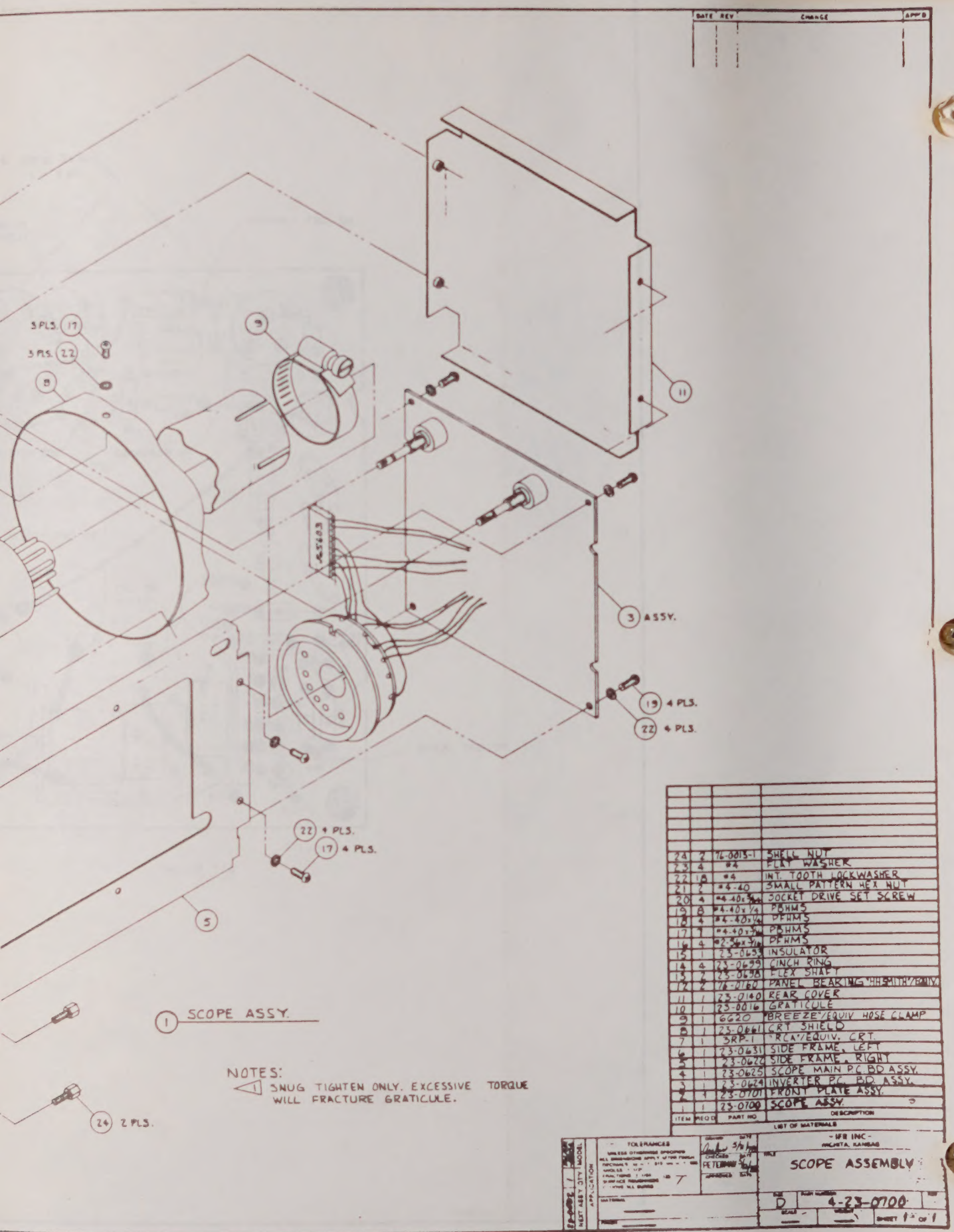

DATE REV CHANGE APP'D
3 PLS. 17
3 PLS. 22
8
9
11
3 ASSY.
19 4 PLS.
22 4 PLS.
22 4 PLS.
17 4 PLS.
5
1 SCOPE ASSY.
24 2 PLS.
NOTES:
1 SNUG TIGHTEN ONLY. EXCESSIVE TORQUE WILL FRACTURE GRATICULE.
24 2 76-0013-1 SHELL NUT
23 4 #4 FLAT WASHER
22 18 #4 INT. TOOTH LOCKWASHER
21 2 #4-40 SMALL PATTERN HEX NUT
20 4 #4-40x3/16 SOCKET DRIVE SET SCREW
19 8 #4-40x1/4 PBHMS
18 4 #4-40x1/4 PFHMS
17 7 #4-40x3/16 PBHMS
16 4 #2-56x3/16 PFHMS
15 1 23-0693 INSULATOR
14 4 23-0699 CINCH RING
13 2 23-0698 FLEX SHAFT
12 2 76-0160 PANEL BEARING "HH SMITH"/EQUIV.
11 1 23-0140 REAR COVER
10 1 23-0016 GRATICULE
9 1 6620 "BREEZE"/EQUIV HOSE CLAMP
8 1 23-0661 CRT SHIELD
7 1 3RP-1 "RCA"/EQUIV. CRT.
6 1 23-0631 SIDE FRAME, LEFT
5 1 23-0622 SIDE FRAME, RIGHT
4 1 23-0625 SCOPE MAIN P.C. BD ASSY.
3 1 23-0624 INVERTER P.C. BD. ASSY.
2 1 23-0701 FRONT PLATE ASSY.
1 1 23-0700 SCOPE ASSY.
ITEM REQ'D PART NO DESCRIPTION
LIST OF MATERIALS
TOLERANCES
NEXT ASSY QTY MODEL
APPLICATION
- IFR INC -
WICHITA, KANSAS
SCOPE ASSEMBLY
D
4-23-0700
SHEET 1 OF 1

Figure 6-89

MP MASTER
MA26216